AECOM
99 Commerce Drive 204 477 5381 tel
Winnipeg, MB, Canada R3P 0Y7 204 284 2040 fax
www.aecom.com

To: Director
Environmental Approvals Branch
Manitoba Sustainable Development
1007 Century Street
Winnipeg, MB R3H 0W4

Date: January 4, 2019

Project #: 60247924.402

From: Mike Gaudreau, P.Eng.

cc: Aaron Kaluzniak, P.Eng.
Alexia Stangherlin, P.Eng.
Patrick Pulak, P.Eng.

Memorandum

Subject: **Kirkcaldy Lift Station and Forcemain**

1. Introduction

A new wastewater lift station and forcemain are anticipated to be operational in the City of Brandon by the fall of 2019. The wastewater lift station is located at the corner of Kirkcaldy Drive and Conservation Drive, and the forcemain runs approximately 1.8 km south to the existing trunk sewer on Pacific Avenue.

Under current conditions, wastewater is conveyed from the north side of the Assiniboine River to the municipal wastewater facility via an inverted siphon under the river, to the Hilton lift station, where flows are pumped to the trunk sewer on Pacific Avenue and ultimately discharged to the municipal waste water facility.

During the 2011 Assiniboine River flood, inflow and infiltration into the manholes on the inverted siphon outside of the flood protection system caused inundation of the wastewater system and Hilton lift station, causing significant basement flooding risk. To protect homes from flood damage, emergency pumping was put in place as a short term mitigation measure.

For long term protection against basement flooding during Assiniboine River flood events, a new lift station on the dry side of the dike, with a forcemain connecting to the trunk sewer on Pacific Avenue was recommended.

The lift station is designed to accommodate both the current wastewater flows, and 20 year future development flows. Future development plans will be reviewed on a case by case basis by the City and in conjunction with the current Environmental Licence No. 2991, and will be submitted to Environment Approvals Branch as required. There will be no increases in wastewater flows to the collection or treatment facility as a result of the work outlined in this document.

Upon completion of the lift station and forcemain project, the existing inverted siphon, include two (2) combined sewer overflow locations at the Assiniboine River, will be abandoned.

Please find the issued for construction drawings of the lift station in **Appendix A**, and the issued for 90% review drawings of the forcemain in **Appendix B**.

2. Design Summary

The following provides a brief design summary for both the lift station and forcemain.

2.1 Lift Station

The lift station was designed to accommodate the existing wastewater flows as follows:

- Peak dry weather flow: 40 l/s
- Average dry weather flow: 29 l/s

The lift station configuration consists of two split wet-wells, each having two (2) pumps (four total pumps), fitted with variable frequency drives (VFDs) to keep levels in the wet well constant. The pumps shall operate in parallel, each having the capacity to run at 60 l/s at 33 m of total dynamic head.

2.2 Forcemain

The forcemain will consist of two (2) parallel 350 mm HDPE DR 17 or 300 mm PVC Series 160 (contractor's preference) pipelines approximately 1.8 km in length (each).

Under current conditions, the system is intended to operate as a single forcemain, with the second parallel forcemain being redundant. Long term development plans will require the use of both the pipelines to operate in parallel.

The forcemain has four notable crossings:

1. Flood protection dike north of the Assiniboine River
2. The Assiniboine River
3. Flood protection dike south of the Assiniboine River
4. CP Rail Broadview Subdivision

The dike crossings will include cutoff collars to protect against erosion due to piping, and ensure subsequent ground loss causing pipe or dike failure does not occur.

The Assiniboine River crossing will be a dual encased horizontal direction drill (HDD) installation, with a 600 mm casing pipe fitted with a sealed monitoring well for leak detection. Consultations with Transport Canada and the Department of Fisheries and Oceans have already taken place, and requirements included in the design and specifications.

The CP Rail Broadview Subdivision crossing will be encased in a 1050 mm steel pipe, and is designed in accordance with CP, Transport Canada, and AREMA standards.

3. Summary

The new Kirkcaldy lift station and forcemain will be replacing the existing inverted siphon crossing that conveys flow from the north side of the Assiniboine River and ultimately discharging into the trunk sewer on Pacific Avenue. Upon completion, the existing inverted siphon, include two combined sewer overflow locations, will be abandoned.

The implementation of the new lift station and forcemain will not increase flows to the municipal wastewater treatment facility, and there should be no change in treatment operations. Consequently, we do not anticipate any deleterious impacts on the environment as a result of the proposed lift station and forcemain system.

Any future development plans that will utilize the Kirkcaldy lift station and forcemain will be reviewed on a case by case basis by the City and in conjunction with the current Environmental Licence No. 2991, and submitted for review to the Environmental Approvals Branch accordingly.

Sincerely,
AECOM Canada Ltd.

Mike Gaudreau, P.Eng.
Municipal Engineer
mike.gaudreau@aecom.com

MG:ag
Encl.

AECOM Imagine it. Delivered.

Appendix A

Kirkcaldy Lift Station
Issued for Construction Drawings

DRAWING INDEX

GENERAL

G-000	GENERAL	COVER SHEET & DRAWING INDEX

CIVIL

C-001	KIRKCALDY LIFT STATION	SITE PLAN AND GRADING
C-002	KIRKCALDY LIFT STATION	DETAILS

BUILDING

B-001	KIRKCALDY LIFT STATION	SCHEDULES
B-002	KIRKCALDY LIFT STATION	STANDARD DETAILS
B-003	KIRKCALDY LIFT STATION	LIFE SAFETY PLAN & ELEVATIONS
B-100	KIRKCALDY LIFT STATION	MAIN LEVEL PLAN & PUMP ROOM PLAN
B-101	KIRKCALDY LIFT STATION	LOWER LEVEL & MAIN FLOOR REFLECTED CEILING PLAN
B-102	KIRKCALDY LIFT STATION	ROOF PLAN
B-200	KIRKCALDY LIFT STATION	ELEVATIONS
B-300	KIRKCALDY LIFT STATION	SECTIONS
B-301	KIRKCALDY LIFT STATION	SECTIONS
B-400	KIRKCALDY LIFT STATION	DETAILS

STRUCTURAL

S-001	KIRKCALDY LIFT STATION	GENERAL NOTES
S-002	KIRKCALDY LIFT STATION	SCHEDULES & CURB DETAILS
S-003	KIRKCALDY LIFT STATION	STANDARD DETAILS
S-004	KIRKCALDY LIFT STATION	STANDARD DETAILS
S-005	KIRKCALDY LIFT STATION	STANDARD DETAILS
S-006	KIRKCALDY LIFT STATION	STANDARD DETAILS
S-100	KIRKCALDY LIFT STATION	LOWER LEVEL PLAN & LOW PLATFORM PLAN
S-101	KIRKCALDY LIFT STATION	MAIN LEVEL FRAMING PLAN & CURBS & WALLS
S-102	KIRKCALDY LIFT STATION	PARTIAL FRAMING PLANS
S-103	KIRKCALDY LIFT STATION	ROOF FRAMING PLAN
S-200	KIRKCALDY LIFT STATION	FRAMING ELEVATIONS
S-300	KIRKCALDY LIFT STATION	SECTIONS
S-301	KIRKCALDY LIFT STATION	SECTIONS
S-400	KIRKCALDY LIFT STATION	DETAILS
S-401	KIRKCALDY LIFT STATION	MONORAIL DETAILS
S-402	KIRKCALDY LIFT STATION	DETAILS
S-403	KIRKCALDY LIFT STATION	DETAILS
S-404	KIRKCALDY LIFT STATION	DETAILS
S-405	KIRKCALDY LIFT STATION	DETAILS

PROCESS & INSTRUMENTATION

N-001	KIRKCALDY LIFT STATION	PROCESS LEGEND & ABBREVIATIONS
N-002	KIRKCALDY LIFT STATION	INSTRUMENTATION LEGEND & ABBREVIATIONS
N-003	KIRKCALDY LIFT STATION	KIRKCALDY LIFT STATION DIAGRAM

PROCESS MECHANICAL

D-101	KIRKCALDY LIFT STATION	LOWER LEVEL PLAN
D-102	KIRKCALDY LIFT STATION	PLATFORM LEVEL PLAN
D-301	KIRKCALDY LIFT STATION	SECTIONS
D-302	KIRKCALDY LIFT STATION	SECTION
D-501	KIRKCALDY LIFT STATION	STANDARD DETAILS
D-502	KIRKCALDY LIFT STATION	STANDARD DETAILS

INSTRUMENTATION

I-101	KIRKCALDY LIFT STATION	LOCATION PLAN

MECHANICAL

GM-001	KIRKCALDY LIFT STATION	LEGEND
M-100	KIRKCALDY LIFT STATION	LOWER LEVEL - PLUMBING
M-101	KIRKCALDY LIFT STATION	MAIN LEVEL - PLUMBING
M-102	KIRKCALDY LIFT STATION	LOWER LEVEL - HVAC
M-103	KIRKCALDY LIFT STATION	MAIN LEVEL - HVAC
M-301	KIRKCALDY LIFT STATION	SECTIONS
M-302	KIRKCALDY LIFT STATION	SECTIONS
M-303	KIRKCALDY LIFT STATION	SECTIONS
M-401	KIRKCALDY LIFT STATION	CONTROL SCHEMATIC
M-402	KIRKCALDY LIFT STATION	CONTROL SCHEMATIC - DIESEL GENERATOR
M-403	KIRKCALDY LIFT STATION	SCHEDULES
M-404	KIRKCALDY LIFT STATION	DETAILS AND SCHEMATICS
M-405	KIRKCALDY LIFT STATION	HVAC DETAILS

ELECTRICAL

E-000	KIRKCALDY LIFT STATION	LEGEND
E-001	KIRKCALDY LIFT STATION	SITE PLAN
E-002	KIRKCALDY LIFT STATION	SINGLE LINE DIAGRAM MCC-100A
E-003	KIRKCALDY LIFT STATION	ELEVATION MCC-100A
E-004	KIRKCALDY LIFT STATION	SCHEDULE
E-101	KIRKCALDY LIFT STATION	MAIN & LOWER LEVEL - POWER
E-102	KIRKCALDY LIFT STATION	ELECTRICAL CLASSIFICATION
E-103	KIRKCALDY LIFT STATION	MAIN & LOWER LEVEL - LIGHTING
E-104	KIRKCALDY LIFT STATION	MAIN & LOWER LEVEL - CABLE TRAY
E-301	KIRKCALDY LIFT STATION	SECTIONS
E-401	KIRKCALDY LIFT STATION	STANDARD DETAILS
E-402	KIRKCALDY LIFT STATION	STANDARD DETAILS
E-403	KIRKCALDY LIFT STATION	STANDARD DETAILS

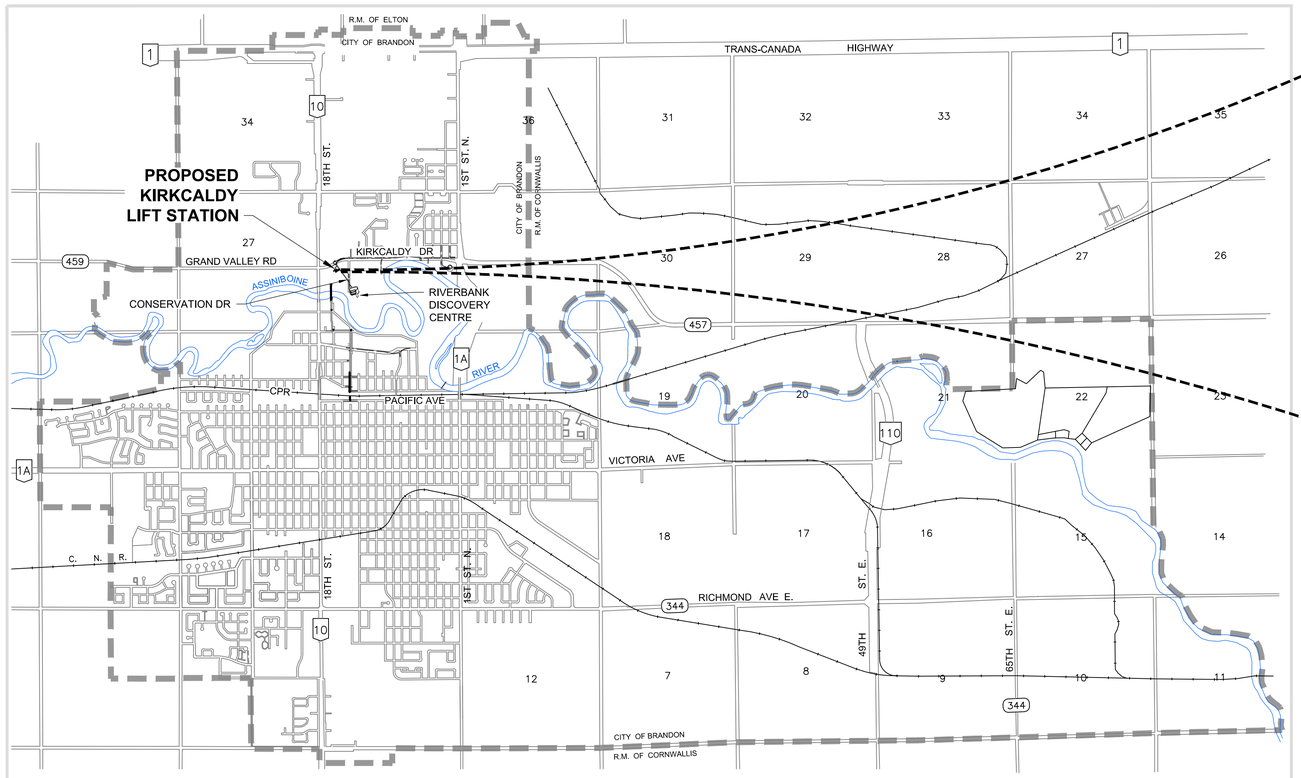

LOCATION PLAN

Scale Horz. 1:35000



AECOM

PROJECT

City of Brandon
Kirkcaldy Lift Station

CLIENT

City of Brandon
Brandon, Manitoba

City of BRANDON

CONSULTANT

AECOM
99 Commerce Drive
Winnipeg, Manitoba R3P 0Y7
204.477.5381 tel 204.284.2040 fax
www.aecom.com

REGISTRATION

APEGM
Certificate of Authorization
AECOM Canada Ltd.
No. 4671 Date: 2018.08.10

ISSUE/REVISION

I/R	DATE	DESCRIPTION
2	2018.12.14	ISSUED FOR CONSTRUCTION
1	2018.08.22	ISSUED FOR ADDENDUM 1
0	2018.08.10	ISSUED FOR TENDER

PROJECT NUMBER

60247924

SHEET TITLE

KIRKCALDY LIFT STATION
GENERAL
COVER SHEET & DRAWING INDEX

SHEET NUMBER

G-000

This drawing has been prepared for the use of AECOM's client and may not be used, reproduced or relied upon by third parties, except as agreed by AECOM and its client, as required by law or for use by governmental reviewing agencies. AECOM accepts no responsibility, and denies any liability whatsoever, to any party that modifies this drawing without AECOM's express written consent. Do not scale this document. All measurements must be obtained from stated dimensions.

Project Management Initials: ____ Designer: ____ Checked: ____ Approved: ____ ANSI D 864mm x 559mm

Last saved by: SMITHE1(2018-12-20) Last Plotted: 2018-12-20
Filename: \\CAWPG1FP001\DATA\PROJECTS\60247924\000-CAD\02-SHEETS\G\KIRKCALDY LIFT STATION AND SOUTH FORCEMAIN\KIRKCALDY LIFT STATION

Printed on ___% Post-Consumer Recycled Content Paper

Project Management Initials: ____ Designer: ____ Checked: ____ Approved: ____ ANSI D 864mm x 559mm

UTM COORDINATE TABLE				
Point #	Northing	Easting	Elevation	Description
1	5523876.22	431071.92	361.65	LIFT STATION–NORTH CORNER
2	5523866.43	431078.51	361.65	LIFT STATION–EAST CORNER
3	5523859.63	431068.38	361.65	LIFT STATION–SOUTH CORNER
4	5523869.42	431061.80	361.65	LIFT STATION–WEST CORNER
5	5523893.14	431107.20	361.15	BEGIN RADIUS
6	5523882.60	431105.25	361.05	END RADIUS
7	5523876.40	431096.03	361.30	BEGIN RADIUS
8	5523878.85	431083.54	361.55	END RADIUS
9	5523884.91	431079.47	361.55	BEGIN RADIUS
10	5523887.36	431066.98	361.55	END RADIUS
11	5523878.76	431054.18	361.55	BEGIN RADIUS

UTM COORDINATE TABLE				
Point #	Northing	Easting	Elevation	Description
12	5523873.68	431050.53	361.55	END RADIUS
13	5523860.27	431046.82	362.00	EDGE GRAVEL
14	5523874.75	431120.17	361.29	BEGIN RADIUS
15	5523876.65	431109.85	361.05	END RADIUS
16	5523850.60	431071.09	362.00	EDGE GRAVEL
17	5523877.82	431066.78	361.67	MANHOLE 4
18	5523877.82	431060.22	0.00	MANHOLE 3
19	5523846.64	431048.35	0.00	350 WWS PLUGS
20	5523894.56	431076.39	0.00	750 WWS PLUG
21	5523877.81	431033.39	0.00	MANHOLE 1
22	5523873.84	431026.65	0.00	WM SERVICE CONNECTION

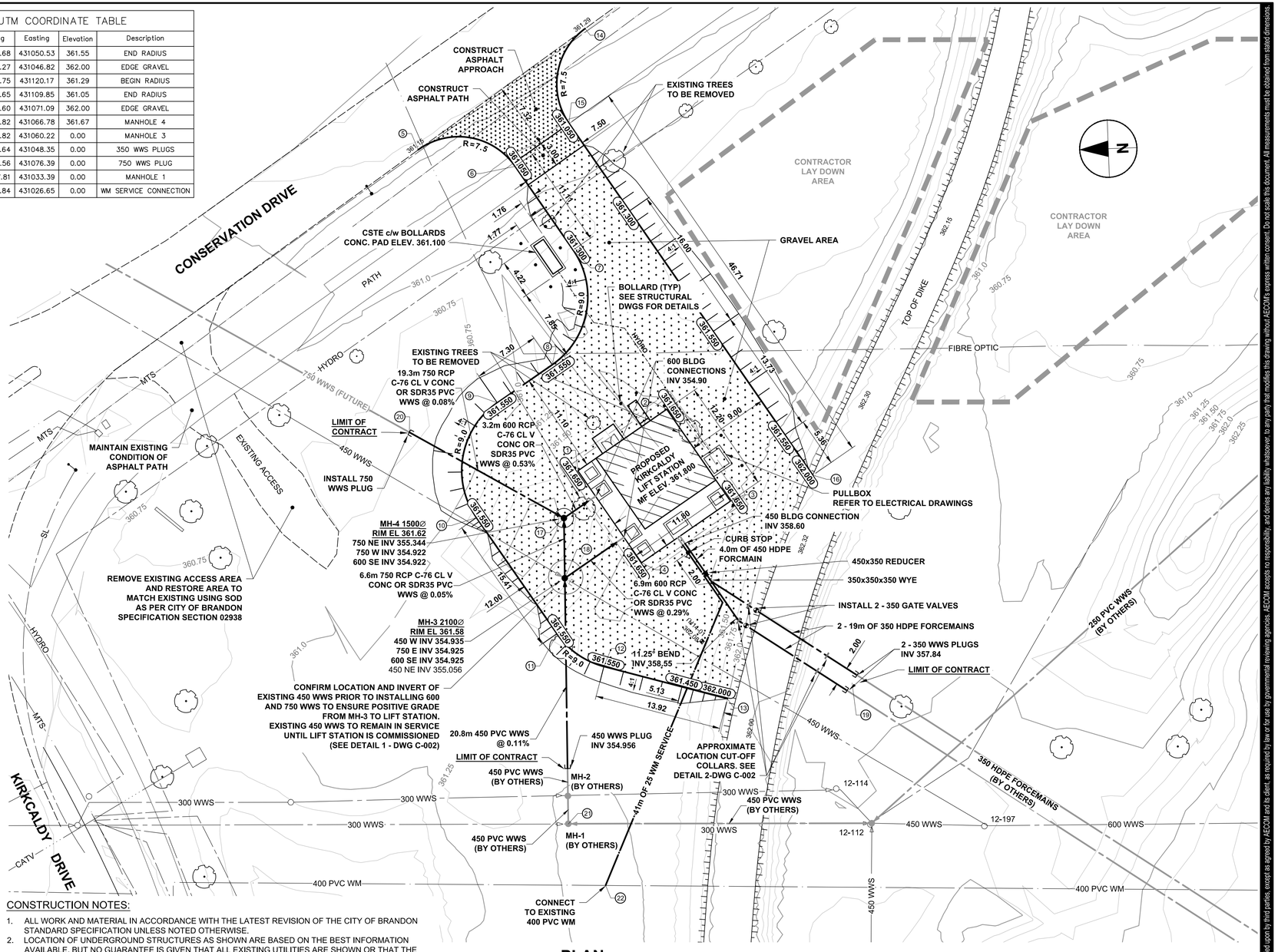

PLAN

Scale Horz. 1:250

CONSTRUCTION NOTES:

1. ALL WORK AND MATERIAL IN ACCORDANCE WITH THE LATEST REVISION OF THE CITY OF BRANDON STANDARD SPECIFICATION UNLESS NOTED OTHERWISE.
2. LOCATION OF UNDERGROUND STRUCTURES AS SHOWN ARE BASED ON THE BEST INFORMATION AVAILABLE. BUT NO GUARANTEE IS GIVEN THAT ALL EXISTING UTILITIES ARE SHOWN OR THAT THE GIVEN LOCATIONS ARE EXACT. CONFIRMATION OF EXISTENCE AND EXACT LOCATION OF ALL SERVICES MUST BE OBTAINED FROM THE INDIVIDUAL UTILITIES BEFORE PROCEEDING WITH CONSTRUCTION.
3. EXPOSE ALL UNDERGROUND UTILITIES BY HYDROVAC EXCAVATION.
4. TRENCH BACKFILL UNDER EXISTING PAVEMENTS SHALL BE IN ACCORDANCE WITH THE CITY OF BRANDON STANDARD CONSTRUCTION SPECIFICATIONS. CONTRACTOR TO REPLACE EXISTING ROAD STRUCTURE WITH CONCRETE PAVEMENT AND CURB.
5. CONTRACTOR TO RESTORE AREA TO EQUAL OR BETTER THAN ORIGINAL CONDITION MAINTAINING POSITIVE DRAINAGE TOWARDS DITCHES.
6. MAINTAIN MIN. 2.75m DEPTH OF COVER ON 25 WATER SERVICE.
7. SURPLUS EXCAVATED MATERIAL TO BE DEPOSITED AT 3500 McDONALD AVE. IN A LOCATION APPROVED BY THE ENGINEER.

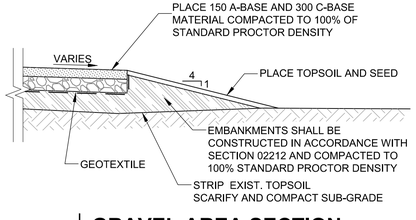

GRAVEL AREA SECTION

Scale NTS

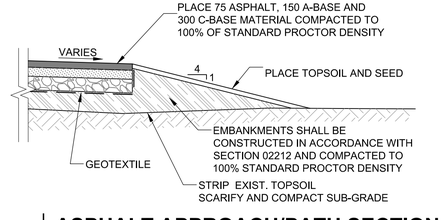

ASPHALT APPROACH/PATH SECTION

Scale NTS

EXISTING	LEGEND - PLAN	NEW	EXISTING	LEGEND - PLAN	NEW	EXISTING	LEGEND - PROFILE	NEW
150 WM	WATERMAIN	150 WM		HYDRO		150 WM	WATERMAIN	150 WM
	HYDRANT			MTS		300 LDS	LAND DRAINAGE SEWER	300 LDS
	VALVE			GAS		250 WWS	WASTE WATER SEWER	250 WWS
300 LDS	LAND DRAINAGE SEWER	300 LDS		LAMP STANDARD			PAVEMENT CROWN	
250 WWS	WASTE WATER SEWER	250 WWS					GROUNDLINE	
	MANHOLE			TRAFFIC SIGNAL				
	CATCH BASIN			ASPHALT				
	FLOW DIRECTION			GRAVEL				
	CULVERT			BACK OF CURB				
	TREE			DRAINAGE				
	SURVEY BAR							

Last saved by: PEDERSEN,I (2018-12-13) Last Plotted: 2018-12-13
Filename: P:\60247924\000-CAD\02-SHEETS\CK\KIRKALDY LIFT STATION\60247924-SHT-30-LS-C-0001.DWG

Printed on ___% Post-Consumer Recycled Content Paper

This drawing has been prepared for the use of AECOM's client and may not be used, reproduced or relied upon by third parties, except as agreed by AECOM and its client, as required by law or for use by governmental reviewing agencies. AECOM accepts no responsibility, and denies any liability whatsoever, to any party that modifies this drawing without AECOM's express written consent. Do not scale this document. All measurements must be obtained from stated dimensions.

AECOM

PROJECT

City of Brandon
Kirkcaldy Lift Station

CLIENT

City of Brandon
Brandon, Manitoba

City of BRANDON

CONSULTANT

AECOM
99 Commerce Drive
Winnipeg, Manitoba R3P 0Y7
204.477.5381 tel 204.284.2040 fax
www.aecom.com

REGISTRATION

PROVINCE OF MANITOBA
M.P.A. GAUDREAU
Member
32167
REGISTERED PROFESSIONAL ENGINEER
2018.12.14

APEGM
Certificate of Authorization
AECOM Canada Ltd.
No. 4671 Date: 2018.12.14

ISSUE/REVISION

I/R	DATE	DESCRIPTION
2	2018.12.14	ISSUED FOR CONSTRUCTION
1	2018.08.23	ISSUED FOR ADDENDUM 1
0	2018.08.10	ISSUED FOR TENDER

PROJECT NUMBER

60247924

SHEET TITLE

KIRKCALDY LIFT STATION
CIVIL
SITE PLAN AND GRADING

SHEET NUMBER

C-001

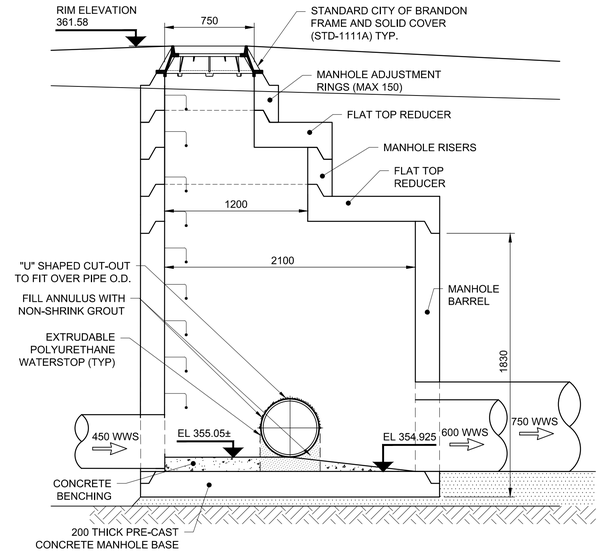

SECTION

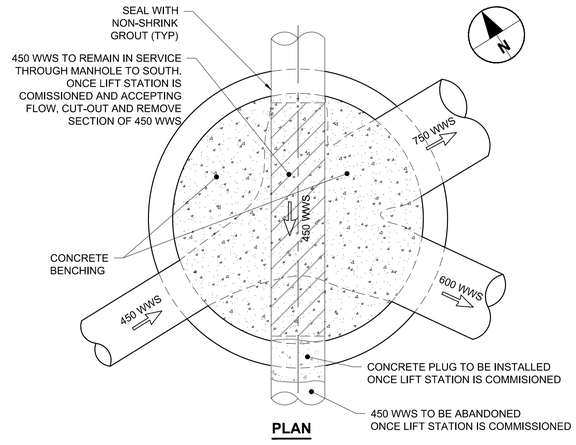

PLAN

DETAIL 1 - MANHOLE 3

Scale Horz. 1:25

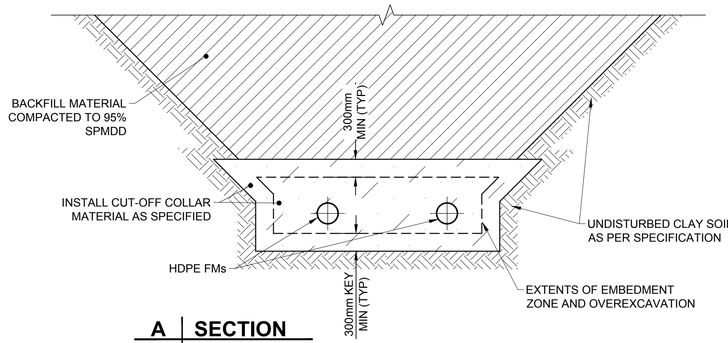

A SECTION

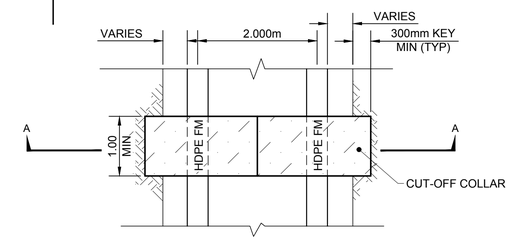

PLAN

DETAIL 2 - SEEPAGE CUT-OFF COLLAR DETAIL

Scale Horz. 1:50

150 WM	WATERMAIN	150 WM		HYDRO		150 WM	WATERMAIN	150 WM
	HYDRANT			MTS		300 LDS	LAND DRAINAGE SEWER	300 LDS
	VALVE			GAS		250 WWS	WASTE WATER SEWER	250 WWS
300 LDS	LAND DRAINAGE SEWER	300 LDS		LAMP STANDARD			PAVEMENT CROWN	
250 WWS	WASTE WATER SEWER	250 WWS					GROUNDLINE	
	MANHOLE			TRAFFIC SIGNAL				
	CATCH BASIN			ASPHALT				
	FLOW DIRECTION			GRAVEL				
	CULVERT			BACK OF CURB				
	TREE			DRAINAGE				
	SURVEY BAR							
EXISTING	LEGEND - PLAN	NEW	EXISTING	LEGEND - PLAN	NEW	EXISTING	LEGEND - PROFILE	NEW

Project Management Initials: Designer: ____ Checked: ____ Approved: ____ ANSI D 864mm x 559mm
Last saved by: PEDERSENJ (2018-12-13) Last Plotted: 2018-12-13
Filename: P:\60247924\000-CAD\02-SHEETS\CIK\KIRKALDY LIFT STATION\60247924-SHT-30-LS-C-0001.DWG
Printed on ___% Post-Consumer Recycled Content Paper

This drawing has been prepared for the use of AECOM's client and may not be used, reproduced or relied upon by third parties, except as agreed by AECOM and its client, as required by law or for use by governmental reviewing agencies. AECOM accepts no responsibility, and denies any liability whatsoever, to any party that modifies this drawing without AECOM's express written consent. Do not scale this document. All measurements must be obtained from stated dimensions.

AECOM

PROJECT

City of Brandon
Kirkcaldy Lift Station

CLIENT

City of Brandon
Brandon, Manitoba

CONSULTANT

AECOM
99 Commerce Drive
Winnipeg, Manitoba R3P 0Y7
204.477.5381 tel 204.284.2040 fax
www.aecom.com

REGISTRATION

PROVINCE OF MANITOBA
M.P.A. GAUDREAU
Member
32107
REGISTERED PROFESSIONAL ENGINEER

APEGM
Certificate of Authorization
AECOM Canada Ltd.
No. 4671 Date: 2018.12.14

ISSUE/REVISION

I/R	DATE	DESCRIPTION
1	2018.12.14	ISSUED FOR CONSTRUCTION
0	2018.08.23	ISSUED FOR ADDENDUM 1

PROJECT NUMBER

60247924

SHEET TITLE

KIRKCALDY LIFT STATION
CIVIL
DETAILS

SHEET NUMBER

C-002

Project Management Initials:Designer: Designer Checked: Checker Approved: Approver ANSI D 559mm x 864mm
Last Plotted: 12/18/2018 10:39:25 AM
Filename: P:\60247924\000-CAD\01-MODELS\SIDesign Files\60247924-MOD-00-S_V17_klippenstinek.rvt
Printed on ___% Post-Consumer Recycled Content Paper

SYMBOL LEGEND

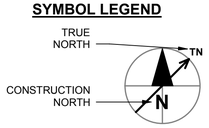

NORTH ARROW

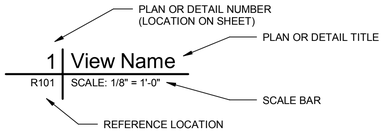

PLAN OR DETAIL TITLE

Room Name
100

ROOM NAME W/ ROOM NUMBER

FH101 FLOOR HATCH TAG | D101 DOOR TAG | W01 WINDOW TAG | L1 LOUVER TAG

1t WALL TAG

EL. 360.000m SPOT ELEVATIONS

GROUND LEVEL EL. 5000 LEVEL HEADS

CENTERLINE TAG

2 REVISION CALLOUT AND CLOUD

FLOW ARROW REFERENCE

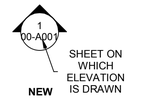

EXTERIOR ELEVATION REFERENCE

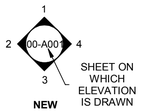

INTERIOR ELEVATION REFERENCE

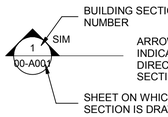

BUILDING SECTION REFERENCE

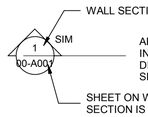

WALL SECTION REFERENCE

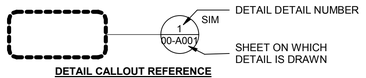

DETAIL CALLOUT REFERENCE



DISCLAIMER
3D VIEWS INCLUDED FOR EASE OF UNDERSTANDING THE WORK. DRAWN DETAILS TAKE PRECEDENCE OVER THESE VIEWS.

&	AND
@	AT
ACT	ACCOUSTICAL CEILING TILE
AFF	ABOVE FINISHED FLOOR
A/C	AIR CONDITIONER / CONDITIONING
ALT	ALTERNATE
ALUM	ALUMINUM
BLDG	BUILDING
BLK	BLOCK
BOT	BOTTOM
BRG	BEARING
CFI	CONCRETE FACED INSULATION
C	CHANNEL
CIP	CAST IN PLACE
CJ	CONTROL JOINT
CL	CENTER LINE
CLR	CLEAR
CMU	CONCRETE MASONRY UNIT
COL	COLUMN
CONC	CONCRETE
CONST	CONSTRUCTION
CONT	CONTINUE / CONTINUOUS
DIA	DIAMETER
DIAG	DIAGONAL
DIM	DIMENSION
DN	DOWN
DWG	DRAWING
EA	EACH
EL	ELEVATION
ELEC	ELECTRICAL
EQ	EQUAL
EQUIP	EQUIPMENT
EXT	EXTERIOR
FIN	FINISH / FINISHED
FT	FOOT / FEET
GA	GAUGE
GALV	GALVANIZED
HP	HIGH POINT
HORIZ	HORIZONTAL
HVAC	HEATING, VENTILATING, AIR CONDITIONING
ID	INSIDE DIAMETER
INSUL	INSULATION
INT	INTERIOR
LP	LINER PANEL
L	ANGLE
LD	LIMITING DISTANCE
LLH	LONG LEG HORIZONTAL
LLV	LONG LEG VERTICAL
LONG	LONGITUDINAL
m	METRE / METRES
MAX	MAXIMUM
MECH	MECHANICAL
MAS	MASONRY
MET	METAL
MIN	MINIMUM
MISC	MISCELLANEOUS
mm	MILLIMETRE / MILLIMETRES
N/A	NOT APPLICABLE
NO	NUMBER
NOM	NOMINAL
NTS	NOT TO SCALE
o/o	OUT TO OUT
o/c	ON CENTER
OD	OUTSIDE DIAMETER
OH	OVERHEAD
OPNG	OPENING
OPP	OPPOSITE
PC	PRECAST CONCRETE
PERP	PERPENDICULAR
PL	PLATE
PR	PAIR
PRELIM	PRELIMINARY
PROJ	PROJECTION
PT	PAINT
QTY	QUANTITY
RWL	RAIN WATER LEADER
RWB	RUBBER WALL BASE
R	RADIUS
REF	REFERENCE
REINF	REINFORCE/-ED/-ING
REQ'D	REVISED / REVISION
REV	REVISE/-ED/-ION
RFI	REQUEST FOR INFORMATION
RM	ROOM
RO	ROUGH OPENING
SPL C	SPECIAL COATING
SCHED	SCHEDULE
SHT	SHEET
SIM	SIMILAR
SPEC	SPECIFICATIONS
SQ	SQUARE
SS	STAINLESS STEEL
STD	STANDARD
STL	STEEL
STRUCT	STRUCTURAL / STRUCTURE
TD	TRAVEL DISTANCE
TBD	TO BE DETERMINED
TEMP	TEMPORARY
THRU	THROUGH
TYP	TYPICAL
VB	VAPOR RETARDER / BARRIER
VERT	VERTICAL
w/	WITH
w/o	WITHOUT
WD	WOOD
WWF	WELDED WIRE FABRIC

DOOR SCHEDULE

DOOR NO.	DOOR TYPE	WIDTH	HEIGHT	THICKNESS	MATERIAL	FINISH	GLASS	FRAME TYPE	FRAME INFORMATION DETAIL HEAD	FRAME INFORMATION DETAIL JAMB	FRAME MATERIAL	FRAME FINISH	FIRE RATING (HOUR)	HARDWARE GROUP	REMARKS
D100	D1	915	2134	45	METAL	PT		B	*	*	METAL	PT	0.75HR	SEE SPECS	
D101	D2	1800	2540	45	METAL	PT		A	*	*	METAL	PT		SEE SPECS	INSULATED

ROOM FINISH SCHEDULE

NO.	ROOM NAME	FLOOR MATERIAL	FLOOR FINISH	FLOOR BASE	WALLS NORTH WALL	WALLS SOUTH WALL	WALLS EAST WALL	WALLS WEST WALL	CEILING MATERIAL	CEILING FINISH	CEILING HEIGHT AFF (mm)	REMARKS
001	WET WELL 1	CONC.	-	-	CONC.	CONC.	CONC.	CONC.	-	-		
002	WET WELL 2	CONC.	-	-	CONC.	CONC.	CONC.	CONC.	-	-		
003	PUMP ROOM	CONC.	-	-	CONC.	CONC.	CONC.	CONC.	-	-		
100	CONTROL ROOM	CONC.	FORMULA 10	-	CMU-PT	CMU-PT	CMU-PT	CMU-PT	LP	PRE-FIN	SEE REFLECTED CEILING PLAN	SEE REFLECTED CEILING PLAN FOR CEILING SYSTEM DETAILS
101	GENERATOR ROOM	CONC.	FORMULA 10	-	CMU-PT	CMU-PT	CMU-PT	CMU-PT	LP	PRE-FIN	SEE REFLECTED CEILING PLAN	SEE REFLECTED CEILING PLAN FOR CEILING SYSTEM DETAILS

CONC. = CONCRETE, CMU-PT = MASONRY PAINT, LP = LINER PANEL, PRE-FIN = PRE-FINISHED

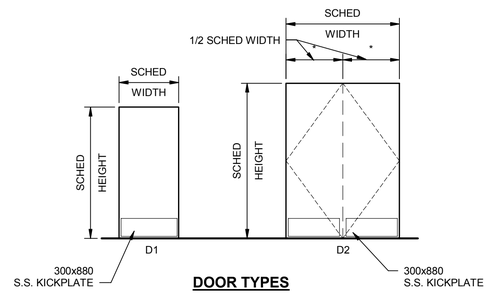

DOOR TYPES

HATCH SCHEDULE

MARK	LENGTH	WIDTH	REMARKS
FH100	914	914	ALUMINUM
FH101	914	914	S316 STAINLESS STEEL
FH102	914	914	S316 STAINLESS STEEL
FH103	914	914	S316 STAINLESS STEEL
FH104	914	914	S316 STAINLESS STEEL
FH105	1829	1219	ALUMINUM

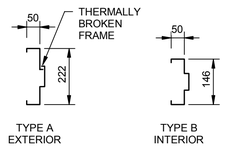

FRAME TYPE

CEILING SCHEDULE

MARK	CEILING SYSTEM	FIRE RATING	DESCRIPTION
CEILING-1	SIMILAR TO NBC 2010 CEILING ASSEMBLY F4d	0.75 FRR	PRE-FINISHED METAL LINER PANEL 16mm TYPE 'X' GYPSUM BOARD, TAPED 20mm PLYWOOD
CEILING 2			CFI BOARD PANEL RSI = 5.02

WALL SCHEDULE

NO.	PLAN DETAIL	DESCRIPTION
P-1		WALL P-1: FOUNDATION PROTECTION WALL 102 CFI BOARD (REFER TO DETAILS) RSI 3.46 DAMPPROOFING CONCRETE SUBSTRATE (REFER TO STRUCTURAL)
P-2		WALL P-2: FOUNDATION PROTECTION WALL PROTECTION BOARD (REFER TO DETAILS) 102 RIGID INSULATION RSI 3.46 DAMPPROOFING CONCRETE SUBSTRATE (REFER TO STRUCTURAL)
W-1		WALL W-1: STONE/CMU VENEER EXTERIOR WALL LIMESTONE AND CONCRETE BRICK VENEER 50mm AIR SPACE 102mm RIGID INSULATION RSI 3.08 AIR/VAPOUR BARRIER 240 CMU (REFER TO STRUCTURAL)
W-2		WALL W-2: PARTITION WALL 1H FRR (NBC 2010 B1b) 190 CMU (REFER TO STRUCTURAL)
W-3		WALL W-3: INTERIOR INSULATED CONCRETE WALL 102 CFI BOARD (REFER TO DETAILS) RSI 3.08 CONCRETE SUBSTRATE (REFER TO STRUCTURAL)

This drawing has been prepared for the use of AECOM's client and may not be used, reproduced or relied upon by third parties, except as agreed by AECOM and as required by law or for use by governmental reviewing agencies. AECOM accepts no responsibility, and denies any liability whatsoever, to any party that modifies this drawing without AECOM's express written consent. Do not scale this document. All measurements must be obtained from the stated dimensions.

AECOM

PROJECT

City of Brandon
Kirkcaldy Lift Station

CLIENT

City of Brandon
Brandon, Manitoba

CONSULTANT

AECOM
99 Commerce Drive
Winnipeg, Manitoba R3P 0Y7
204.477.5381 tel 204.284.2040 fax
www.aecom.com

REGISTRATION

PROVINCE OF MANITOBA
M. M. HOQUE
Member
30114
REGISTERED PROFESSIONAL ENGINEER
2018-12-14

APEGM
Certificate of Authorization
AECOM Canada Ltd.
No. 4671 Date: 2018.12.14

ISSUE/REVISION

I/R	DATE	DESCRIPTION
1	2018.12.14	ISSUED FOR CONSTRUCTION
0	2018.08.10	ISSUED FOR TENDER

PROJECT NUMBER

60247924

SHEET TITLE

KIRKCALDY LIFT STATION
BUILDING
SCHEDULES

SHEET NUMBER

B001

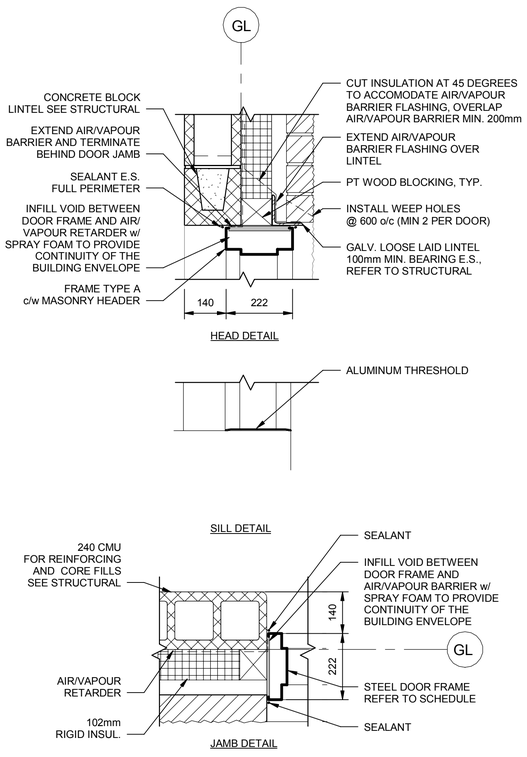

EXTERIOR DOOR

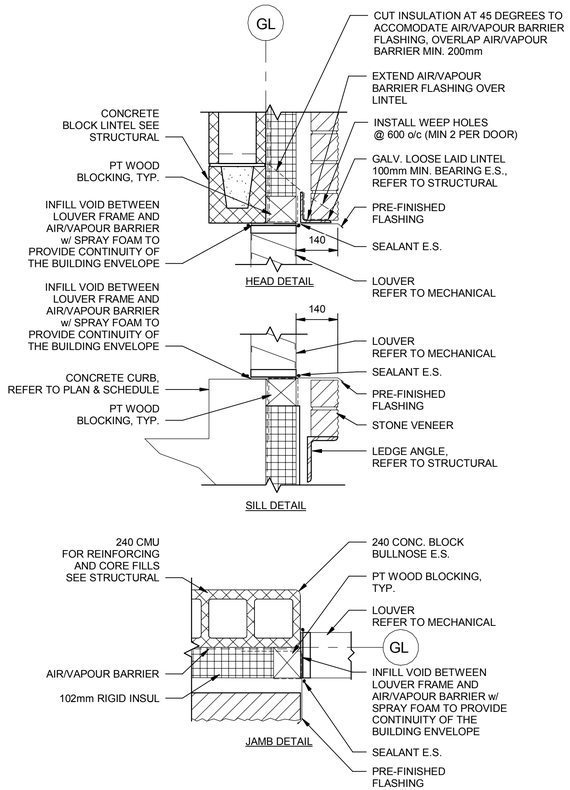

EXTERIOR LOUVER @ MASONRY WALL

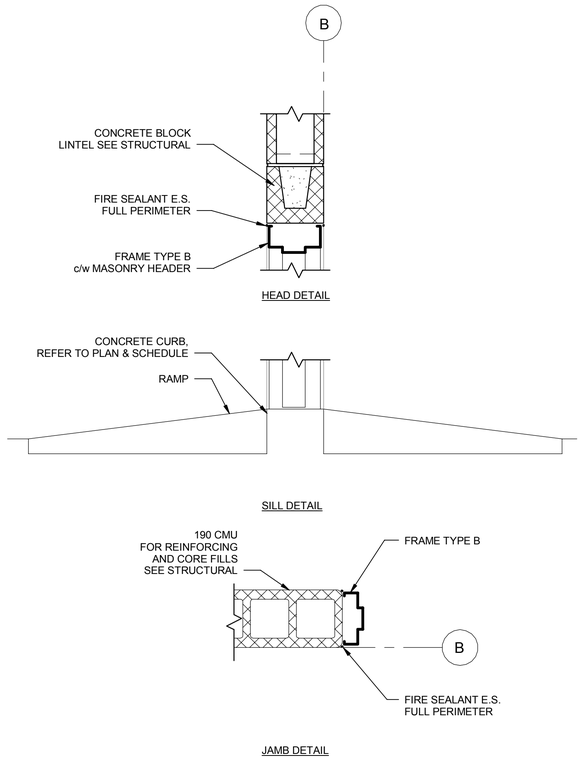

INTERIOR DOOR

1 STD DETAIL HEAD, SILL, JAMB

SCALE: 1 : 10

This drawing has been prepared for the use of AECOM's client and may not be used, reproduced or relied upon by third parties, except as agreed by AECOM and its client, as required by law or for use by governmental reviewing agencies. AECOM accepts no responsibility, and denies any liability whatsoever, to any party that modifies this drawing without AECOM's express written consent. Do not scale this document. All measurements must be obtained from the stated dimensions.

AECOM

PROJECT

City of Brandon
Kirkcaldy Lift Station

CLIENT

City of Brandon
Brandon, Manitoba

CONSULTANT

AECOM
99 Commerce Drive
Winnipeg, Manitoba R3P 0Y7
204.477.5381 tel 204.284.2040 fax
www.aecom.com

REGISTRATION

PROVINCE OF MANITOBA
M. M. HOQUE
Member
30114
REGISTERED PROFESSIONAL ENGINEER
2018-12-14

APEGM
Certificate of Authorization
AECOM Canada Ltd.
No. 4671 Date: 2018.12.14

ISSUE/REVISION

1	2018.12.14	ISSUED FOR CONSTRUCTION
0	2018.08.10	ISSUED FOR TENDER
I/R	DATE	DESCRIPTION

PROJECT NUMBER

60247924

SHEET TITLE

KIRKCALDY LIFT STATION
BUILDING
STANDARD DETAILS

SHEET NUMBER

B002

Project Management Initials:Designer: KK Checked: GGP Approved: Approver ANSI D 559mm x 864mm

Last Plotted: 12/18/2018 10:39:27 AM
Filename: P:\60247924\000-CAD\01-MODELS\S\Design Files\60247924-MOD-00-S_V17_klippenstinek.rvt

Printed on ___% Post-Consumer Recycled Content Paper

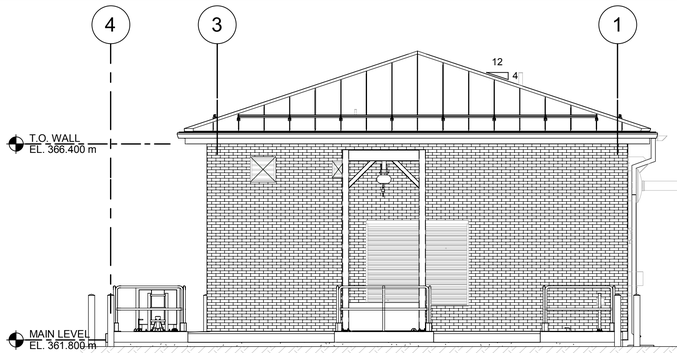

1 | LD NORTH ELEVATION
SCALE: 1 : 70

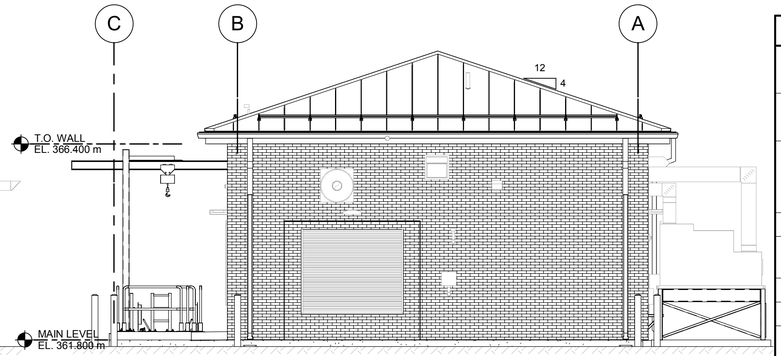

2 | LD EAST ELEVATION
SCALE: 1 : 70

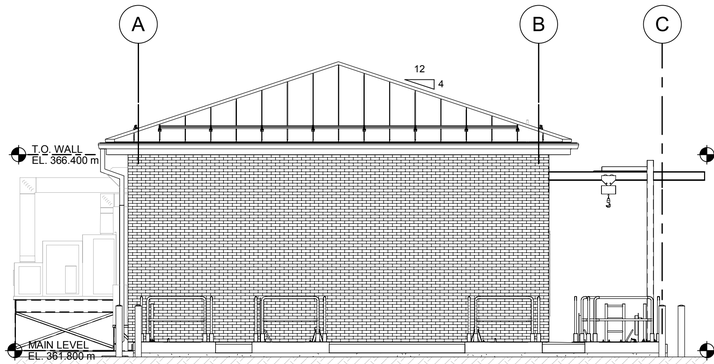

3 | LD SOUTH ELEVATION
SCALE: 1 : 70

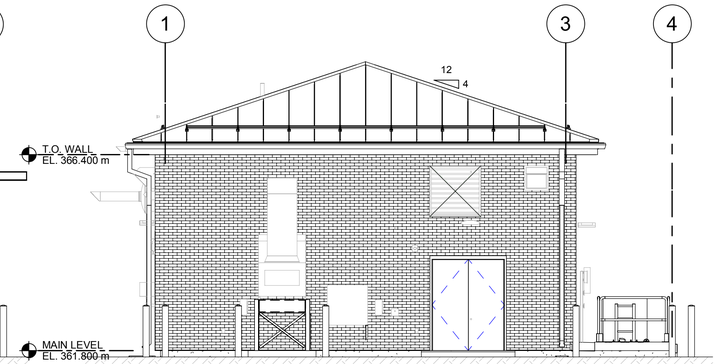

4 | LD WEST ELEVATION
SCALE: 1 : 70

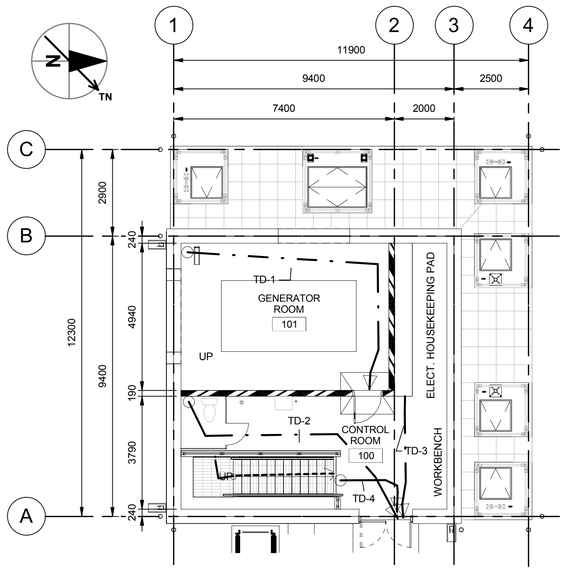

5 | MAIN LVL - LIFE SAFETY PLAN
B003 | SCALE: 1 : 100

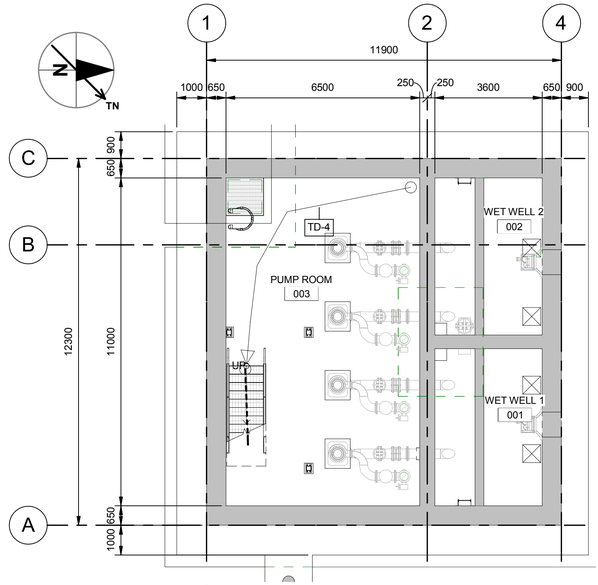

6 | LOWER LVL - LIFE SAFETY PLAN
B300 | SCALE: 1 : 100

BUILDING CODE ANALYSIS

PROJECT DESCRIPTION: CITY OF BRANDON KIRKCALDY LIFT STATION ■ NEW ☐ ADDITION ☐ ALTERATION ☐ CHANGE OF USE							APPLICABLE CODE REFERENCE NUMBER
BUILDING CODES USED: NATIONAL BUILDING CODE OF CANADA 2010 (NBC) NATIONAL FIRE CODE OF CANADA 2010 (NFCC)							
MAJOR OCCUPANCY CLASSIFICATION: PART 9, GROUP F, DIVISION 3, LOW HAZARD INDUSTRIAL OCCUPANCY							NBC 9.10.2.1
BUILDING AREA = NEW 98m² EXISTING = 0 TOTAL = 98m²							
NUMBER OF STOREYS ABOVE GRADE = 1 NUMBER OF STOREYS BELOW GRADE = 1 (PUMP SERVICE SPACE)							NBC 9.10.4
MEZZANINE AREA = N/A							
NUMBER OF STREETS / FIREFIGHTER ACCESS = FACING 2 STREET							
SPRINKLER SYSTEM REQUIRED:	☐ ENTIRE BUILDING ☐ BASEMENT ONLY ☐ IN LIEU OF ROOF RATING ■ NOT REQUIRED						NBC 9.10.1.3.8) PART 9 STRUCTURE
PERMITTED CONSTRUCTION: ☐ COMBUSTIBLE ☐ NON-COMBUSTIBLE ■ BOTH	ACTUAL CONSTRUCTION: ☐ COMBUSTIBLE ■ NON-COMBUSTIBLE ☐ BOTH						NBC 9.10.15.5
LIMITING DISTANCE, SPATIAL SEPARATION & EXPOSING BUILDING FACES:							NBC 9.10.14.5, TABLE 9.10.14.5.A, TABLE 9.10.14.5.B

NORTH ELEVATION	SOUTH ELEVATION	EAST ELEVATION	WEST ELEVATION
RATIO = 2:1 AREA = 46 m² LD = 10m ALLOWED OPNGS = 100% OPENINGS = 11% BUILDING FACE FRR = 0H CLADDING REQ'D ☐ COMBUSTIBLE ☐ NON-COMBUSTIBLE ■ BOTH	RATIO = 2:1 AREA = 46 m² LD = 10m ALLOWED OPNGS = 100% OPENINGS = 0% BUILDING FACE FRR = 0H CLADDING REQ'D ☐ COMBUSTIBLE ☐ NON-COMBUSTIBLE ■ BOTH	RATIO = 2:1 AREA = 46 m² LD = 10m ALLOWED OPNGS = 100% OPENINGS = 10% BUILDING FACE FRR = 0H CLADDING REQ'D ☐ COMBUSTIBLE ☐ NON-COMBUSTIBLE ■ BOTH	RATIO = 2:1 AREA = 46 m² LD = 10m ALLOWED OPNGS = 100% OPENINGS = 11% BUILDING FACE FRR = 0H CLADDING REQ'D ☐ COMBUSTIBLE ☐ NON-COMBUSTIBLE ■ BOTH

STANDPIPE REQUIRED:	☐	YES	■	NO		NBC 9.10.1.3.8) PART 9 STRUCTURE
ADEQUATE WATER SUPPLY / SERVICE:	■	YES	☐	NO		NBC 3.2.5.7
FIRE ALARM REQUIRED:	☐	YES	■	NO		NBC 9.10.18.2.1) *
FIRE DETECTORS REQUIRED:	☐	YES	■	NO		NBC 9.10.18.2.1) *
SMOKE DETECTORS REQUIRED:	■	YES	☐	NO		NBC 3.2.4.11
EMERGENCY LIGHTING REQUIRED:	■	YES	☐	NO		NBC 9.9.12.3
EXIT SIGNAGE REQUIRED:	■	YES	☐	NO		NBC 9.9.11.3
ATTIC FIRESTOPS REQUIRED:	☐	YES	☐	NO	■ N/A	NBC 3.1.11.5
BARRIER FREE ACCESS REQUIRED: SERVICE BUILDING REQUIRING HEAVY LIFTING	☐	YES	■	NO	(EXPLAIN)	NBC 3.8
HAZARDOUS SUBSTANCES:	☐	YES	■	NO		NBC 3.3.5, NFCC 3.2.7.9
HIGH BUILDING:	☐	YES	■	NO		NBC 3.2.6
OCCUPANT LOAD: BASED ON STAFFING ■ BASED ON CODE ☐ 1-3 INTERMITTENT PERSONS						BASED ON USE
W/C'S REQUIRED: N/R W/C'S PROVIDED: N/R						SERVICE BUILIDNG
MINIMUM NUMBER OF REQUIRED EXITS FOR LOWER LEVEL = N/A MINIMUM NUMBER OF REQUIRED EXITS FOR MAIN FLOOR = 1 MINIMUM NUMBER OF REQUIRED EXITS FOR SECOND FLOOR = N/A TRAVEL DISTANCE FOR ROOMS WITHIN THE MAIN FLOOR = 15M TRAVEL DISTANCE FOR LOWER LEVEL SERVICE SPACE = 50M						NBC 9.9.8.2.2 MAX. 200m² FOR 1 EXIT NBC TABLE 9.9.7.4. NBC 3.4.2.4.3)
PUBLIC CORRIDOR SEPARATIONS: FIRE SEPARATIONS REQUIRED = NON REQUIRED FIRE RESISTANCE RATING REQUIRED = REQUIRED						NBC 9.10.8.3

REQUIRED FIRE RESISTANCE RATING IN HOURS:

ROOFS	BEARING ASSEMBLIES	FLOORS ASSEMBLIES	GENERATOR ROOM	ELECTRICAL ROOM
= 0.75H NBC 9.10.8.1	= 0H NBC 9.10.8.5	= 0H NBC 9.10.8.5	= 1H NBC 9.10.10.3	= 0H NBC 9.10.10.3

* ELECTRICAL EQUIPMENT REQUIRES FIRE DETECTORS, FIRE ALARM PANEL REQUIRED TO MONITOR ELECTRICAL EQUIPMENT FIRE DETECTORS ONLY.

TRAVEL DISTANCE SCHEDULE

MARK	EGRESS TRAVEL DISTANCE	REQUIREMENT
TD-1	11 m	15M TRAVEL DISTANCE
TD-2	9 m	15M TRAVEL DISTANCE
TD-3	9 m	15M TRAVEL DISTANCE
TD-4	35 m	50M TRAVEL DISTANCE

This drawing has been prepared for the use of AECOM's clients and may not be used, reproduced or relied upon by third parties, except as agreed by AECOM and its client, as required by law or by governmental reviewing agencies. AECOM assumes no responsibility, and denies any liability whatsoever, to any party that modifies this drawing without AECOM's express written consent. Do not scale this document. All measurements must be obtained from the stated dimensions.

AECOM

PROJECT

City of Brandon
Kirkcaldy Lift Station

CLIENT

City of Brandon
Brandon, Manitoba

CONSULTANT

AECOM
99 Commerce Drive
Winnipeg, Manitoba R3P 0Y7
204.477.5381 tel 204.284.2040 fax
www.aecom.com

REGISTRATION

PROVINCE OF MANITOBA
M. M. HOQUE
Member
30114
REGISTERED PROFESSIONAL ENGINEER
2018-12-14

APEGM
Certificate of Authorization
AECOM Canada Ltd.
No. 4671 Date: 2018.12.14

ISSUE/REVISION

I/R	DATE	DESCRIPTION
1	2018.12.14	ISSUED FOR CONSTRUCTION
0	2018.08.10	ISSUED FOR TENDER

PROJECT NUMBER

60247924

SHEET TITLE

KIRKCALDY LIFT STATION
BUILDING
LIFE SAFETY PLAN
ELEVATIONS

SHEET NUMBER

B003

Project Management Initials:Designer: Designer Checked: Checker Approved: Approver ANSI D 559mm x 864mm
Last Plotted: 12/18/2018 10:39:37 AM
Filename: P:\60247924\000-CAD\01-MODELS\SIDesign Files\60247924-MOD-00-S_V17_klippenstinek.rvt

Printed on ___% Post-Consumer Recycled Content Paper

Project Management Initials:Designer: Designer Checked: Checker Approved: Approver ANSI D 559mm x 864mm

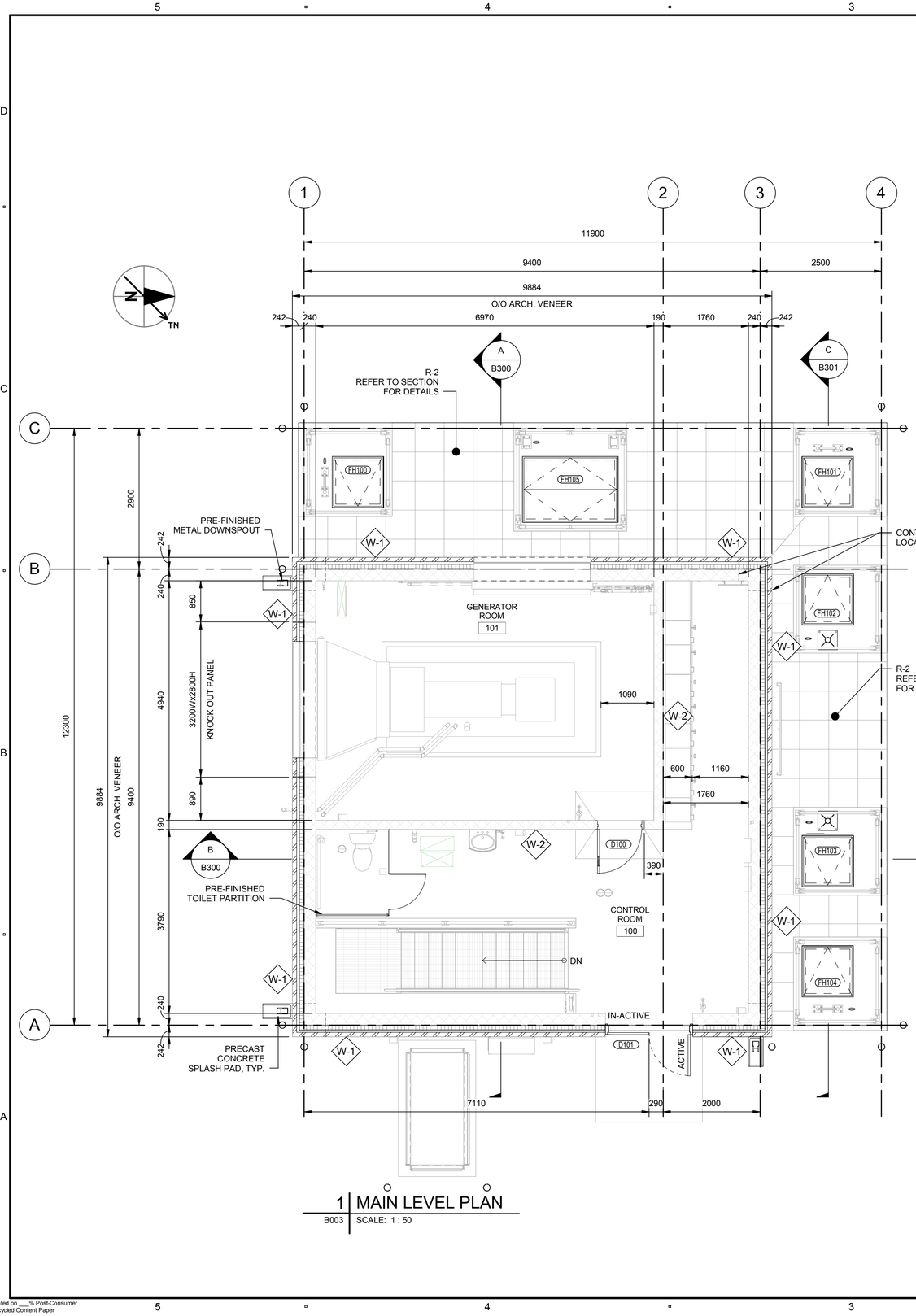

1 | MAIN LEVEL PLAN
B003 | SCALE: 1 : 50

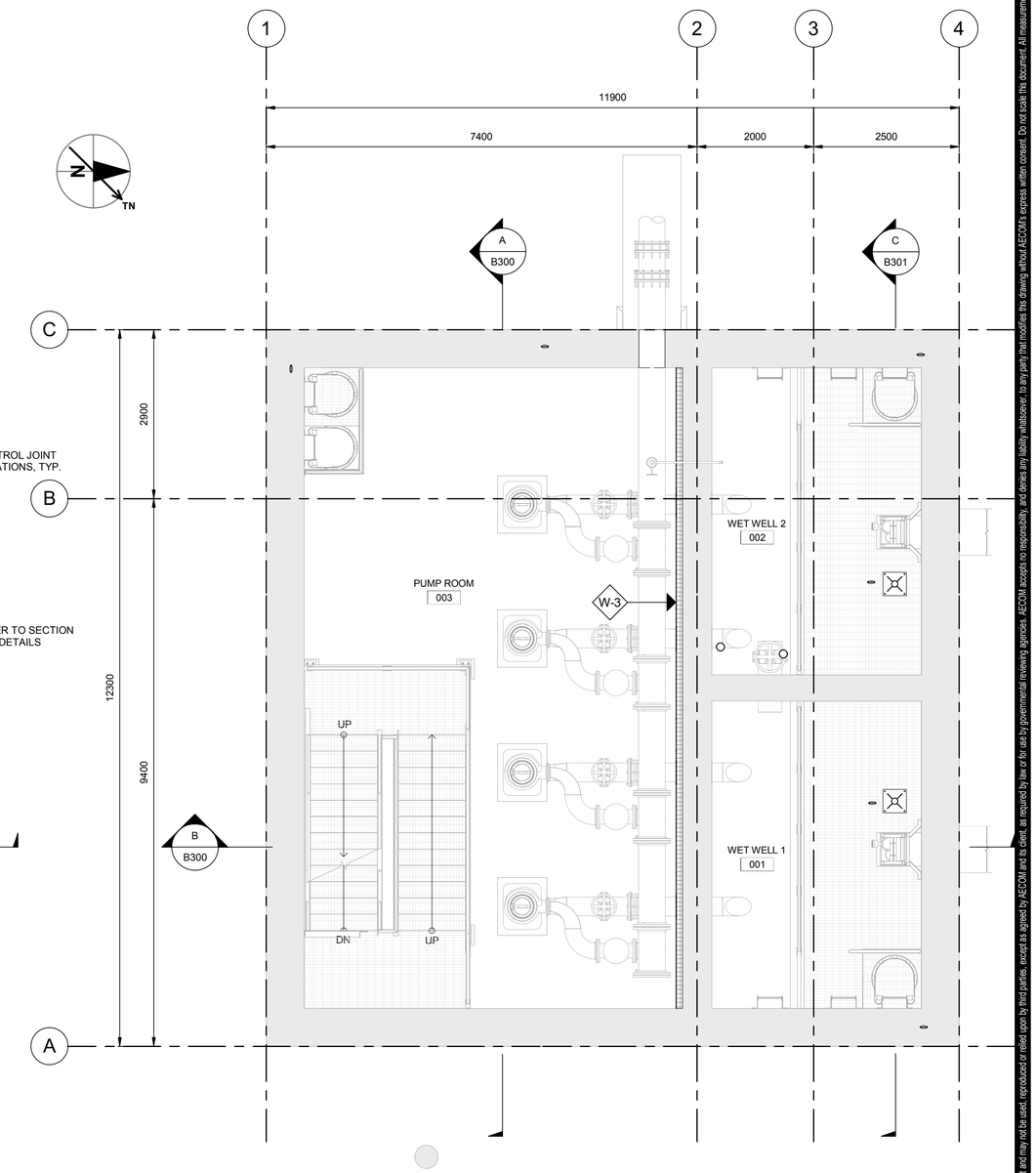

2 | PUMP ROOM PLAN
B300 | SCALE: 1 : 50

This drawing has been prepared for the use of AECOM's client and may not be used, reproduced or relied upon by third parties, except as agreed by AECOM and as required by law or for use by governmental reviewing agencies. AECOM accepts no responsibility, and denies any liability whatsoever, to any party that modifies this drawing without AECOM's express written consent. Do not scale this document. All measurements must be obtained from the stated dimensions.

AECOM

PROJECT

City of Brandon
Kirkcaldy Lift Station

CLIENT

City of Brandon
Brandon, Manitoba

CONSULTANT

AECOM
99 Commerce Drive
Winnipeg, Manitoba R3P 0Y7
204.477.5381 tel 204.284.2040 fax
www.aecom.com

REGISTRATION

PROVINCE OF MANITOBA
M. M. HOQUE
Member
30114
REGISTERED PROFESSIONAL ENGINEER
2018-12-14

APEGM
Certificate of Authorization
AECOM Canada Ltd.
No. 4671 Date: 2018.12.14

ISSUE/REVISION

1	2018.12.14	ISSUED FOR CONSTRUCTION
0	2018.08.10	ISSUED FOR TENDER
I/R	DATE	DESCRIPTION

PROJECT NUMBER

60247924

SHEET TITLE

KIRKCALDY LIFT STATION
BUILDING
MAIN LEVEL PLAN
PUMP ROOM PLAN

SHEET NUMBER

B100

Last Plotted: 12/18/2018 10:39:45 AM
Filename: P:\60247924\000-CAD\01-MODELS\Design Files\60247924-MOD-00-S_V17_klippenstinek.rvt

Printed on ___% Post-Consumer Recycled Content Paper

Project Management Initials:Designer: Designer Checked: Checker Approved: Approver ANSI D 559mm x 864mm

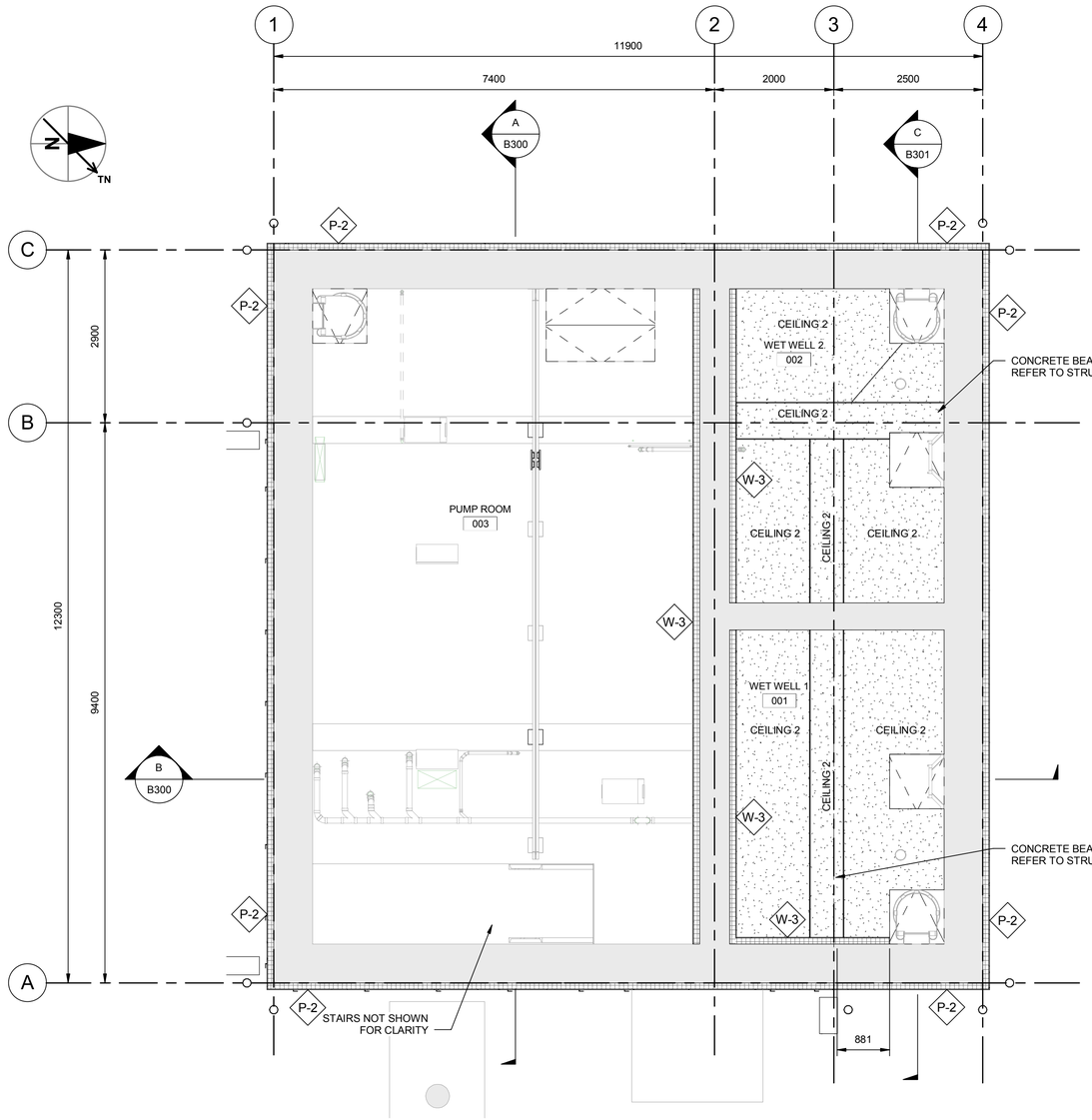

1 | LOWER LEVEL REFLECTED CEILING PLAN

B300 | SCALE: 1 : 50

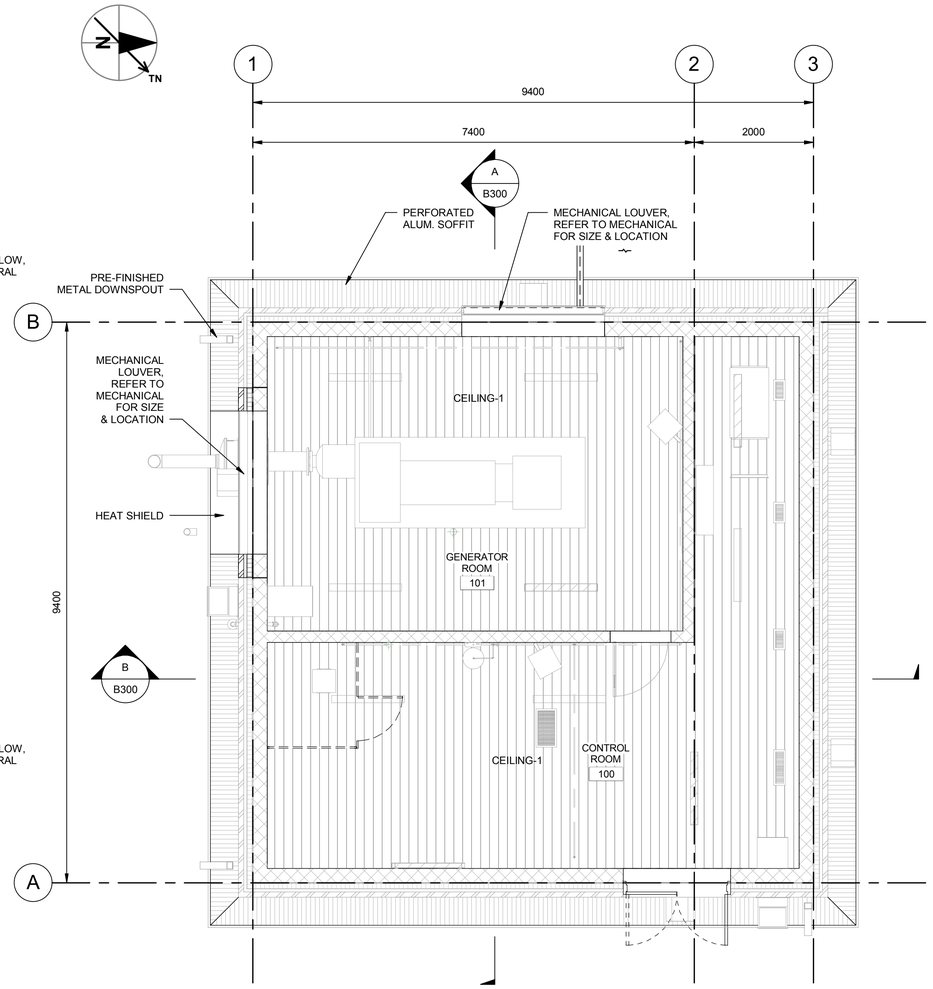

2 | MAIN FLOOR REFLECTED CEILING PLAN

B003 | SCALE: 1 : 50

DUCTS AND CABLE TRAYS NOT SHOW FOR CLARITY

This drawing has been prepared for the use of AECOM's client and may not be used, reproduced or relied upon by third parties, except as agreed by AECOM and its client, as required by law or for use by governmental reviewing agencies. AECOM accepts no responsibility, and denies any liability whatsoever, to any party that modifies this drawing without AECOM's express written consent. Do not scale this document. All measurements must be obtained from the stated dimensions.

AECOM

PROJECT

City of Brandon
Kirkcaldy Lift Station

CLIENT

City of Brandon
Brandon, Manitoba

CONSULTANT

AECOM
99 Commerce Drive
Winnipeg, Manitoba R3P 0Y7
204.477.5381 tel 204.284.2040 fax
www.aecom.com

REGISTRATION

PROVINCE OF MANITOBA
M. M. HOQUE
Member
30114
REGISTERED PROFESSIONAL ENGINEER
2018-12-14

APEGM
Certificate of Authorization
AECOM Canada Ltd.
No. 4671 Date: 2018.12.14

ISSUE/REVISION

1	2018.12.14	ISSUED FOR CONSTRUCTION
0	2018.08.10	ISSUED FOR TENDER
I/R	DATE	DESCRIPTION

PROJECT NUMBER

60247924

SHEET TITLE

KIRKCALDY LIFT STATION
BUILDING
LOWER LEVEL & MAIN FLOOR
REFLECTED CEILING PLAN

SHEET NUMBER

B101

Last Plotted: 12/18/2018 10:39:49 AM
Filename: P:\60247924\000-CAD\01-MODELS\Design Files\60247924-MOD-00-S_V17_klippenslinek.rvt

Printed on ___% Post-Consumer Recycled Content Paper

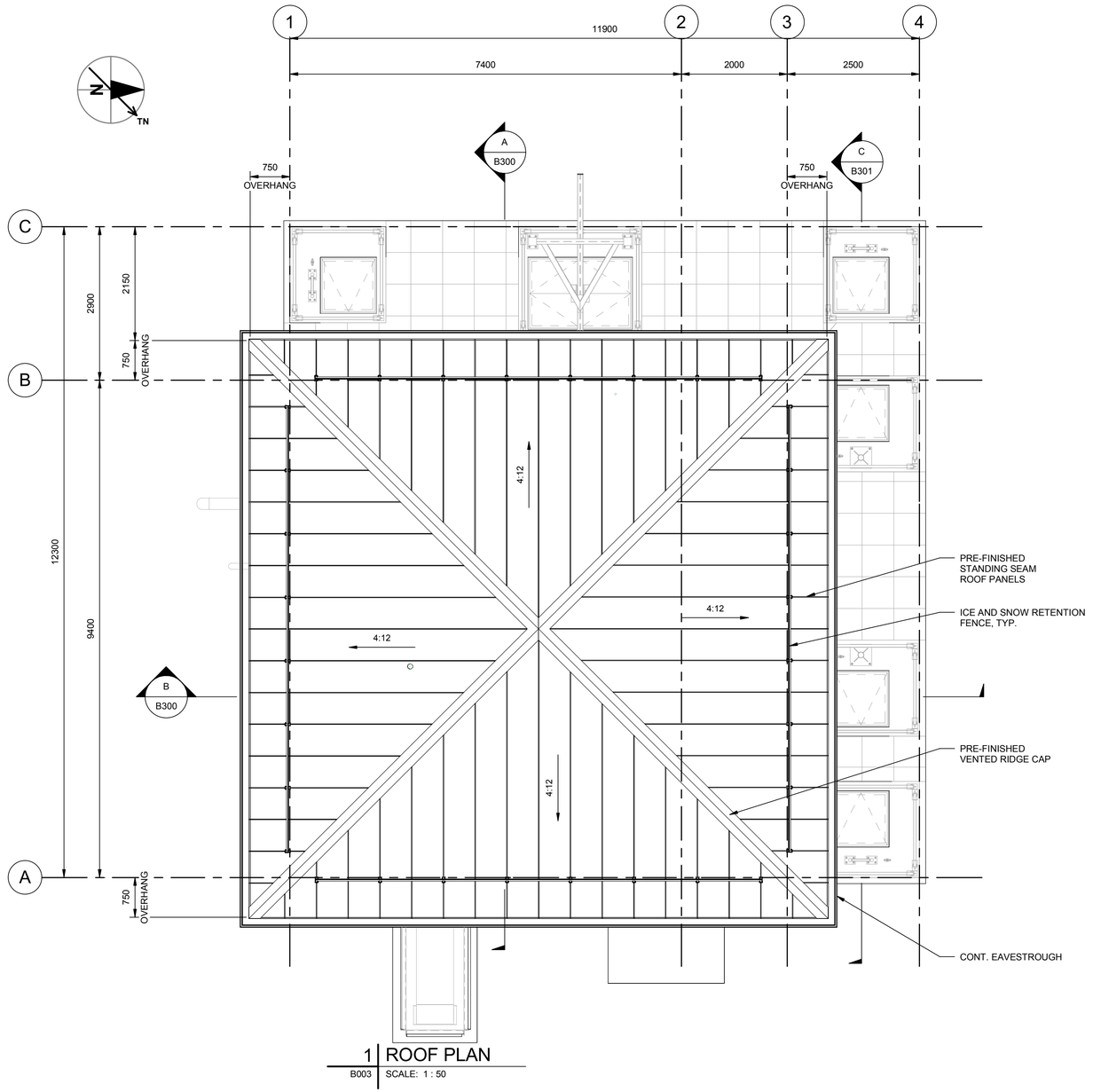

1 | ROOF PLAN
B003 | SCALE: 1 : 50

This drawing has been prepared for the use of AECOM's client and may not be used, reproduced or relied upon by third parties, except as agreed by AECOM and its client, as required by law or for use by governmental reviewing agencies. AECOM accepts no responsibility, and denies any liability whatsoever, to any party that modifies this drawing without AECOM's express written consent. Do not scale this document. All measurements must be obtained from the stated dimensions.

AECOM

PROJECT

City of Brandon
Kirkcaldy Lift Station

CLIENT

City of Brandon
Brandon, Manitoba

CONSULTANT

AECOM
99 Commerce Drive
Winnipeg, Manitoba R3P 0Y7
204.477.5381 tel 204.284.2040 fax
www.aecom.com

REGISTRATION

PROVINCE OF MANITOBA
M. M. HOQUE
Member
30114
REGISTERED PROFESSIONAL ENGINEER
2018-12-14

APEGM
Certificate of Authorization
AECOM Canada Ltd.
No. 4671 Date: 2018.12.14

ISSUE/REVISION

I/R	DATE	DESCRIPTION
1	2018.12.14	ISSUED FOR CONSTRUCTION
0	2018.08.10	ISSUED FOR TENDER

PROJECT NUMBER

60247924

SHEET TITLE

KIRKCALDY LIFT STATION
BUILDING
ROOF PLAN

SHEET NUMBER

B102

Project Management Initials:Designer: Designer Checked: Checker Approved: Approver ANSI D 559mm x 864mm
Last Plotted: 12/18/2018 10:39:52 AM
Filename: P:\60247924\000-CAD\01-MODELS\SIDesign Files\60247924-MOD-00-S_V17_klippenstinek.rvt
Printed on ___% Post-Consumer Recycled Content Paper

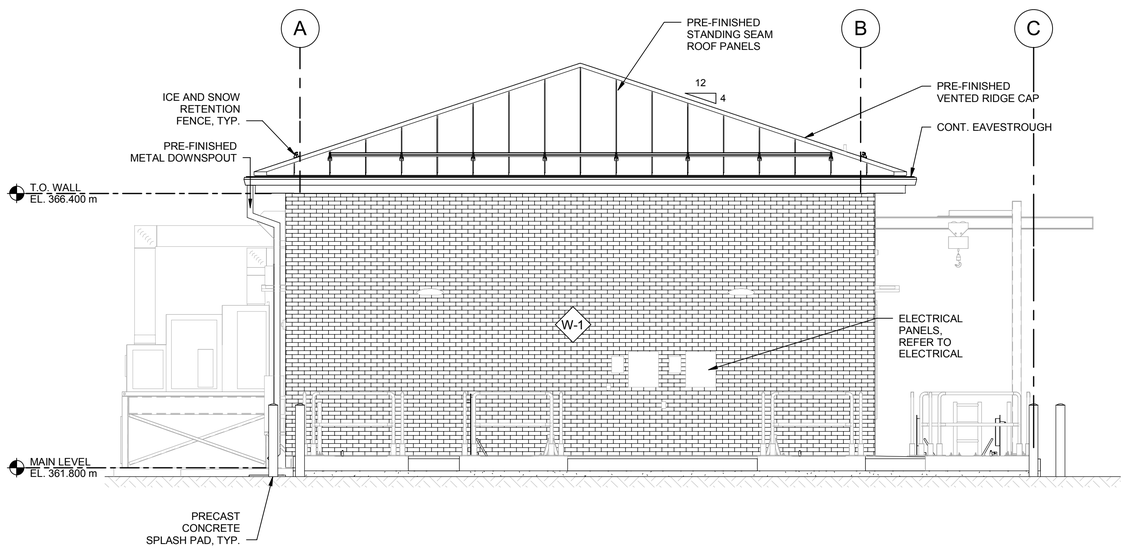

3 | NORTH ELEVATION

SCALE: 1 : 50

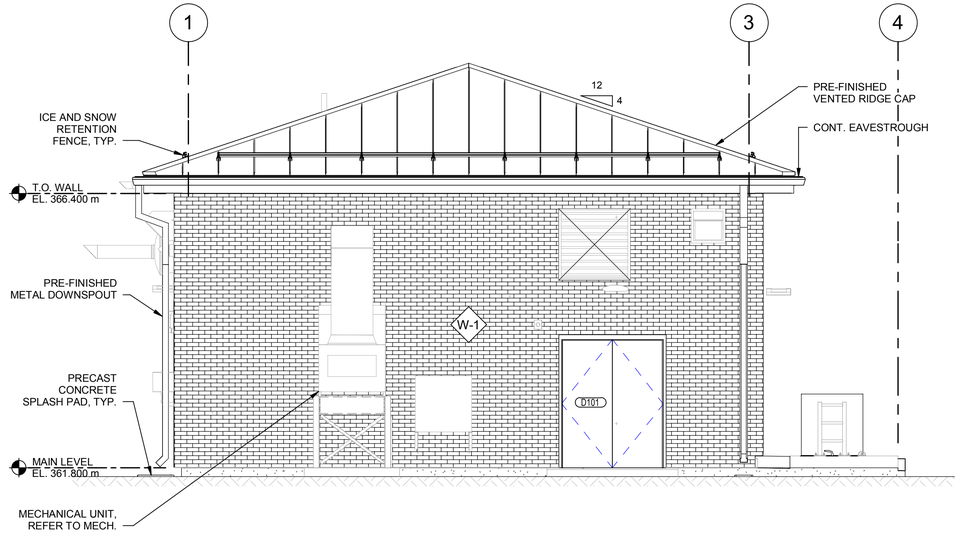

4 | EAST ELEVATION

SCALE: 1 : 50

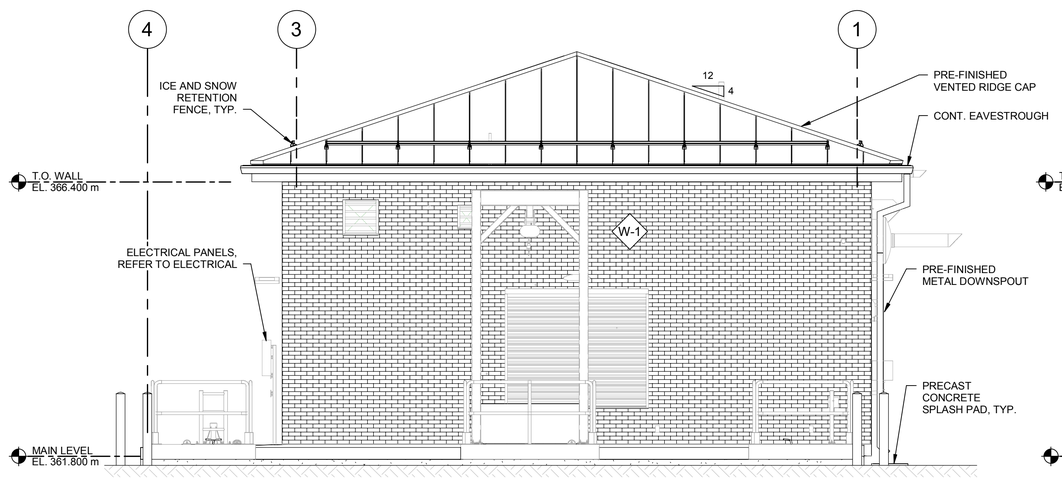

1 | SOUTH ELEVATION

SCALE: 1 : 50

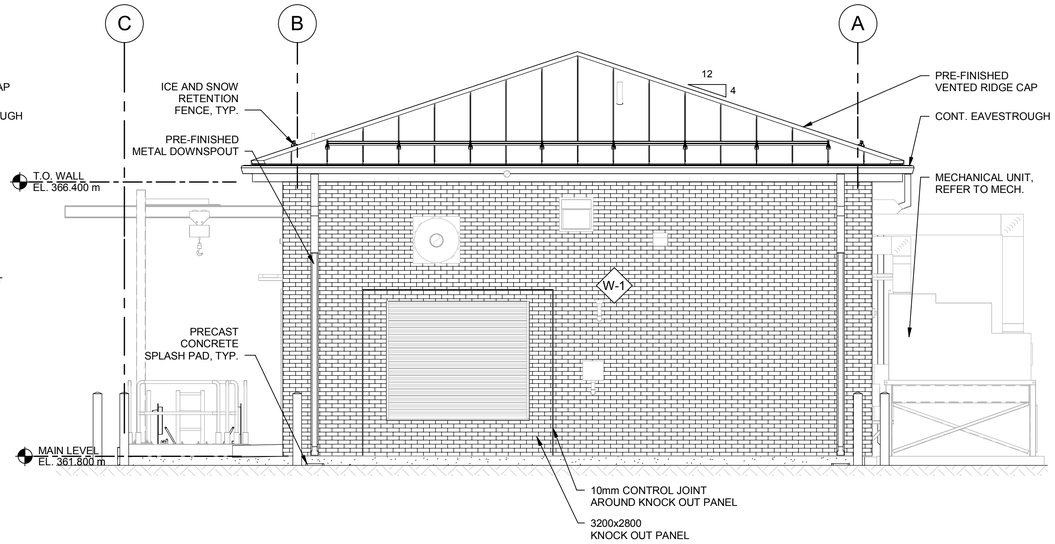

2 | WEST ELEVATION

SCALE: 1 : 50

This drawing has been prepared for the use of AECOM's client and may not be used, reproduced or relied upon by third parties, except as agreed by AECOM and as required by law or for use by governmental reviewing agencies. AECOM assumes no responsibility, and denies any liability whatsoever, to any party that modifies this drawing without AECOM's express written consent. Do not scale this document. All measurements must be obtained from the stated dimensions.

AECOM

PROJECT

City of Brandon
Kirkcaldy Lift Station

CLIENT

City of Brandon
Brandon, Manitoba

CONSULTANT

AECOM
99 Commerce Drive
Winnipeg, Manitoba R3P 0Y7
204.477.5381 tel 204.284.2040 fax
www.aecom.com

REGISTRATION

PROVINCE OF MANITOBA
M. M. HOQUE
Member
30114
REGISTERED PROFESSIONAL ENGINEER
2018-12-14

APEGM
Certificate of Authorization
AECOM Canada Ltd.
No. 4671 Date: 2018.12.14

ISSUE/REVISION

1	2018.12.14	ISSUED FOR CONSTRUCTION
0	2018.08.10	ISSUED FOR TENDER
I/R	DATE	DESCRIPTION

PROJECT NUMBER

60247924

SHEET TITLE

KIRKCALDY LIFT STATION
BUILDING
ELEVATIONS

SHEET NUMBER

B200

Project Management Initials:Designer: Designer Checked: Checker Approved: Approver ANSI D 559mm x 864mm
Last Plotted: 12/18/2018 10:39:59 AM
Filename: P:\60247924\000-CAD\01-MODEL\STS\Design Files\60247924-MOD-00-S_V17_ klippenstinek.rvt
Printed on ___% Post-Consumer Recycled Content Paper

Project Management Initials:Designer: Designer Checked: Checker Approved: Approver ANSI D 559mm x 864mm

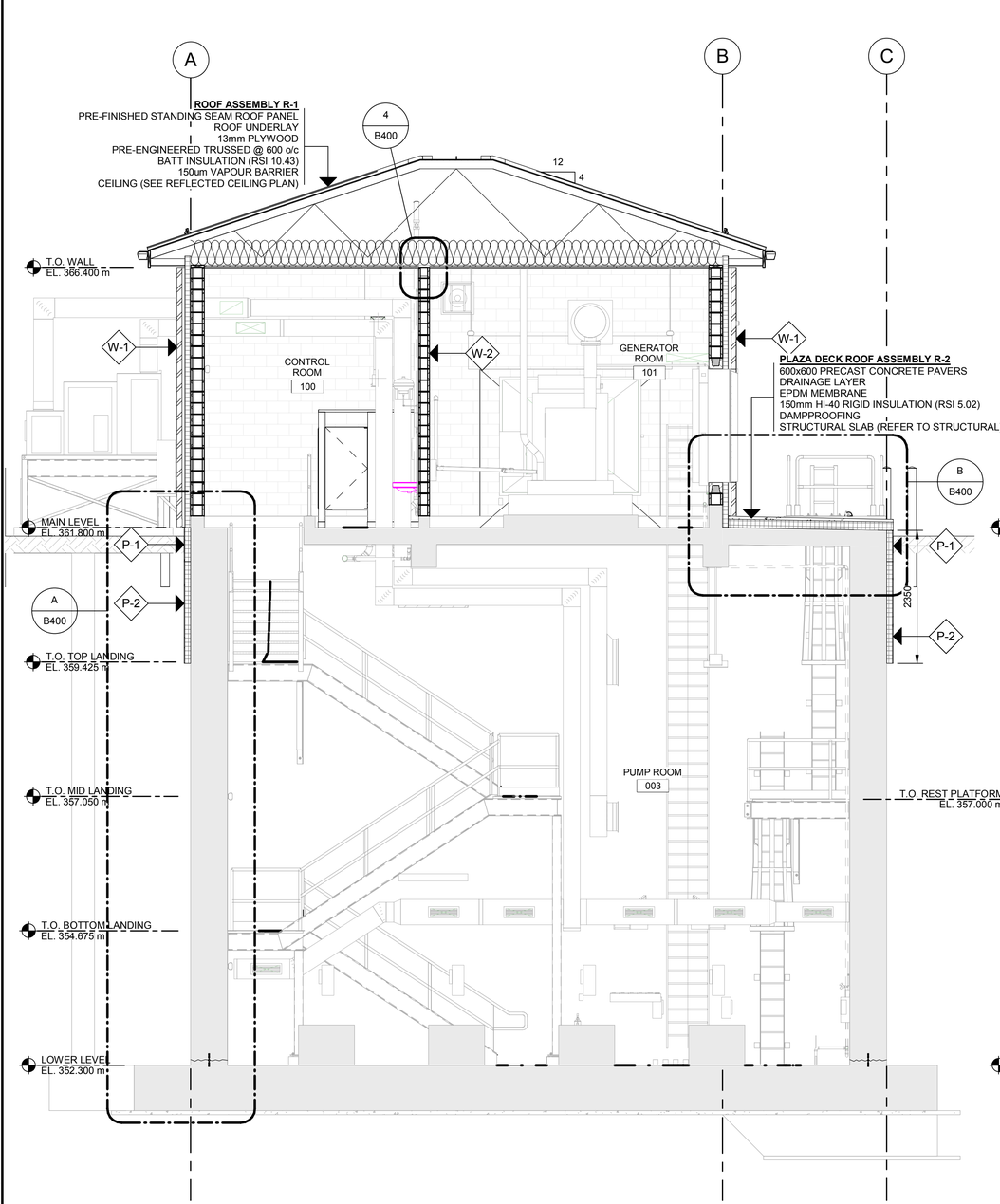

A | SECTION
B100 | SCALE: 1 : 50

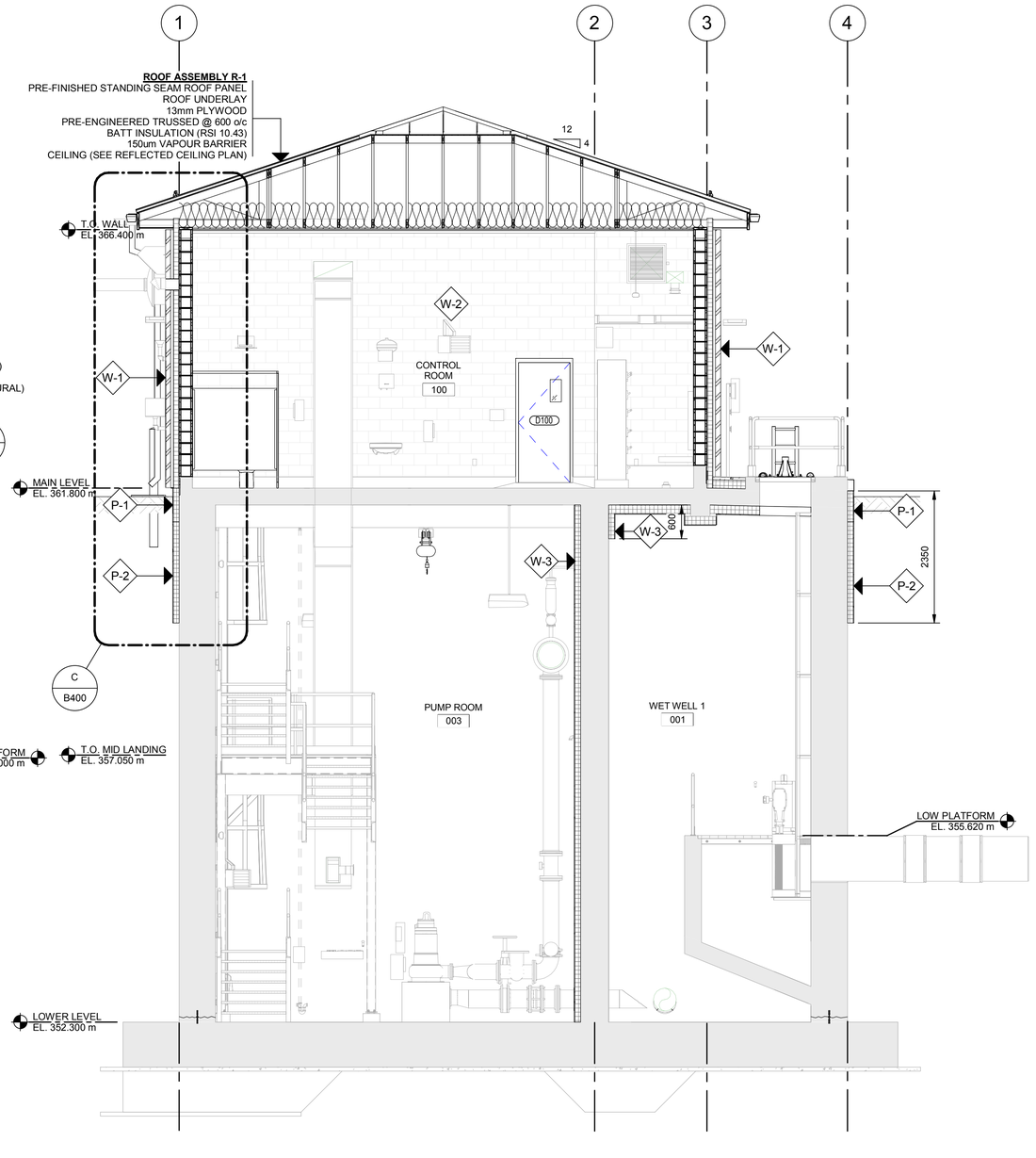

B | SECTION
B100 | SCALE: 1 : 50

Last Plotted: 12/18/2018 10:40:09 AM
Filename: P:\60247924\000-CAD\01-MODELS\S\Design Files\60247924-MOD-00-S_V17_klippenstinek.rvt

Printed on ___% Post-Consumer Recycled Content Paper

This drawing has been prepared for the use of AECOM's client and may not be used, reproduced or relied upon by third parties, except as agreed by AECOM and its client, as required by law or for use by governmental reviewing agencies. AECOM accepts no responsibility, and denies any liability whatsoever, to any party that modifies this drawing without AECOM's express written consent. Do not scale this document. All measurements must be obtained from the stated dimensions.

AECOM

PROJECT

City of Brandon
Kirkcaldy Lift Station

CLIENT

City of Brandon
Brandon, Manitoba

City of BRANDON

CONSULTANT

AECOM
99 Commerce Drive
Winnipeg, Manitoba R3P 0Y7
204.477.5381 tel 204.284.2040 fax
www.aecom.com

REGISTRATION

PROVINCE OF MANITOBA
M. M. HOQUE
Member
30114
REGISTERED PROFESSIONAL ENGINEER
2018-12-14

APEGM
Certificate of Authorization
AECOM Canada Ltd.
No. 4671 Date: 2018.12.14

ISSUE/REVISION

I/R	DATE	DESCRIPTION
1	2018.12.14	ISSUED FOR CONSTRUCTION
0	2018.08.10	ISSUED FOR TENDER

PROJECT NUMBER

60247924

SHEET TITLE

KIRKCALDY LIFT STATION
BUILDING
SECTIONS

SHEET NUMBER

B300

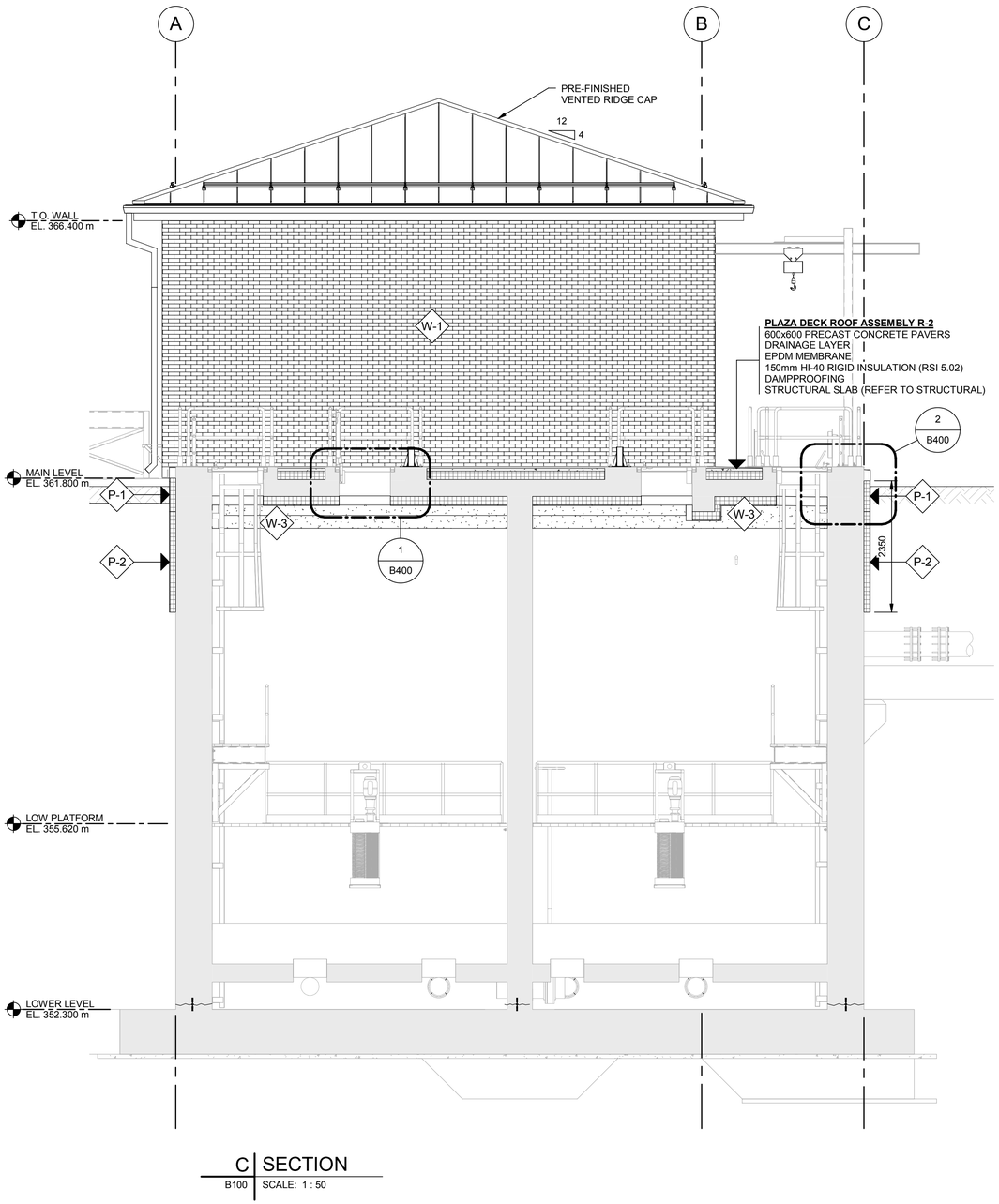

C SECTION
B100 SCALE: 1 : 50

Project Management Initials:Designer: Designer Checked: Checker Approved: Approver ANSI D 559mm x 864mm

Last Plotted: 12/18/2018 10:40:18 AM
Filename: P:\60247924\000-CAD\01-MODELS\Design Files\60247924-MOD-00-S_V17_klippenslinek.rvt

Printed on ___% Post-Consumer Recycled Content Paper

This drawing has been prepared for the use of AECOM's client and may not be used, reproduced or relied upon by third parties, except as agreed by AECOM and its client, as required by law or for use by governmental reviewing agencies. AECOM accepts no responsibility, and denies any liability whatsoever, to any party that modifies this drawing without AECOM's express written consent. Do not scale this document. All measurements must be obtained from the stated dimensions.

AECOM

PROJECT

City of Brandon
Kirkcaldy Lift Station

CLIENT

City of Brandon
Brandon, Manitoba

CONSULTANT

AECOM
99 Commerce Drive
Winnipeg, Manitoba R3P 0Y7
204.477.5381 tel 204.284.2040 fax
www.aecom.com

REGISTRATION

PROVINCE OF MANITOBA
M. M. C. HOOUE
Member
30114
REGISTERED PROFESSIONAL ENGINEER
2018-12-14

APEGM
Certificate of Authorization
AECOM Canada Ltd.
No. 4671 Date: 2018.12.14

ISSUE/REVISION

1	2018.12.14	ISSUED FOR CONSTRUCTION
0	2018.08.10	ISSUED FOR TENDER
I/R	DATE	DESCRIPTION

PROJECT NUMBER

60247924

SHEET TITLE

KIRKCALDY LIFT STATION
BUILDING
SECTIONS

SHEET NUMBER

B301

Project Management Initials:Designer: Designer Checked: Checker Approved: Approver ANSI D 559mm x 864mm

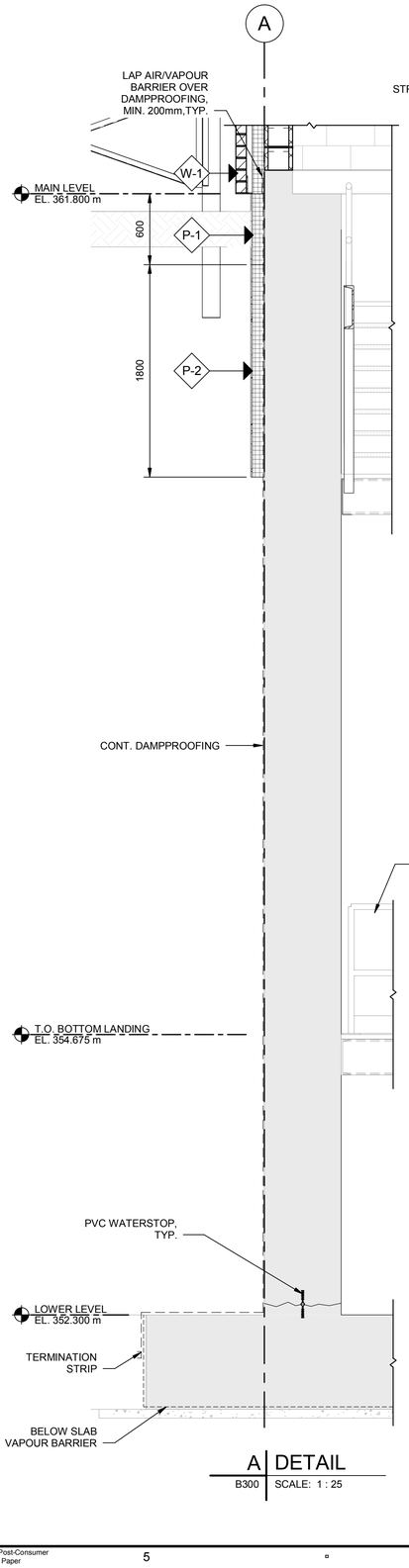

A | DETAIL
B300 | SCALE: 1 : 25

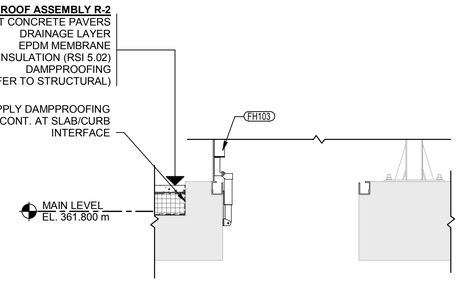

1 | DETAIL
B301 | SCALE: 1 : 20

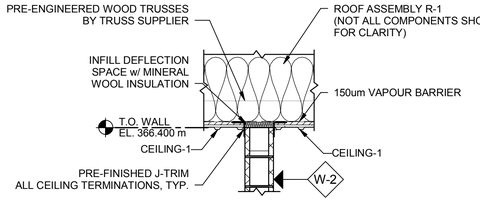

4 | DETAIL
B300 | SCALE: 1 : 20

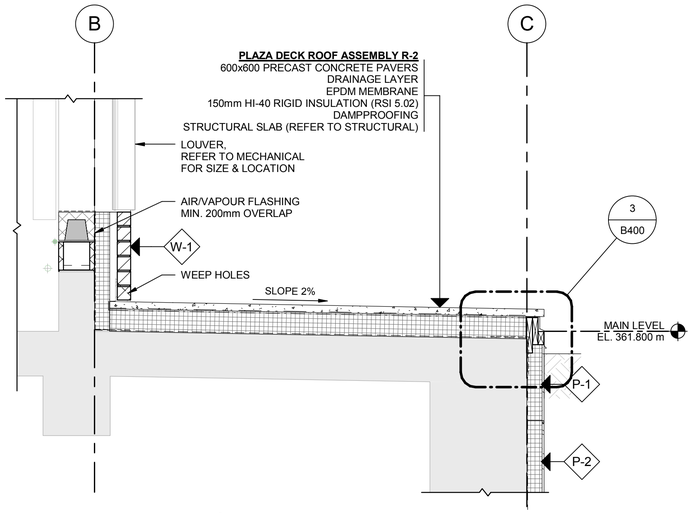

B | DETAIL
B300 | SCALE: 1 : 20

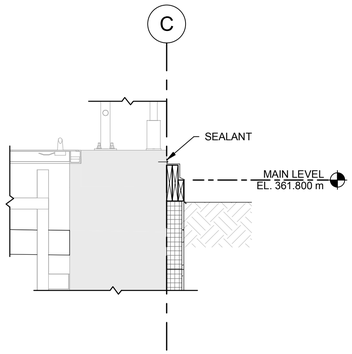

2 | DETAIL
B301 | SCALE: 1 : 20

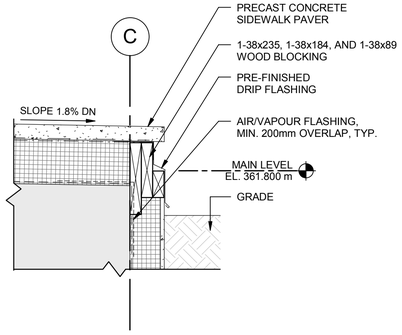

3 | DETAIL
B400 | SCALE: 1 : 10

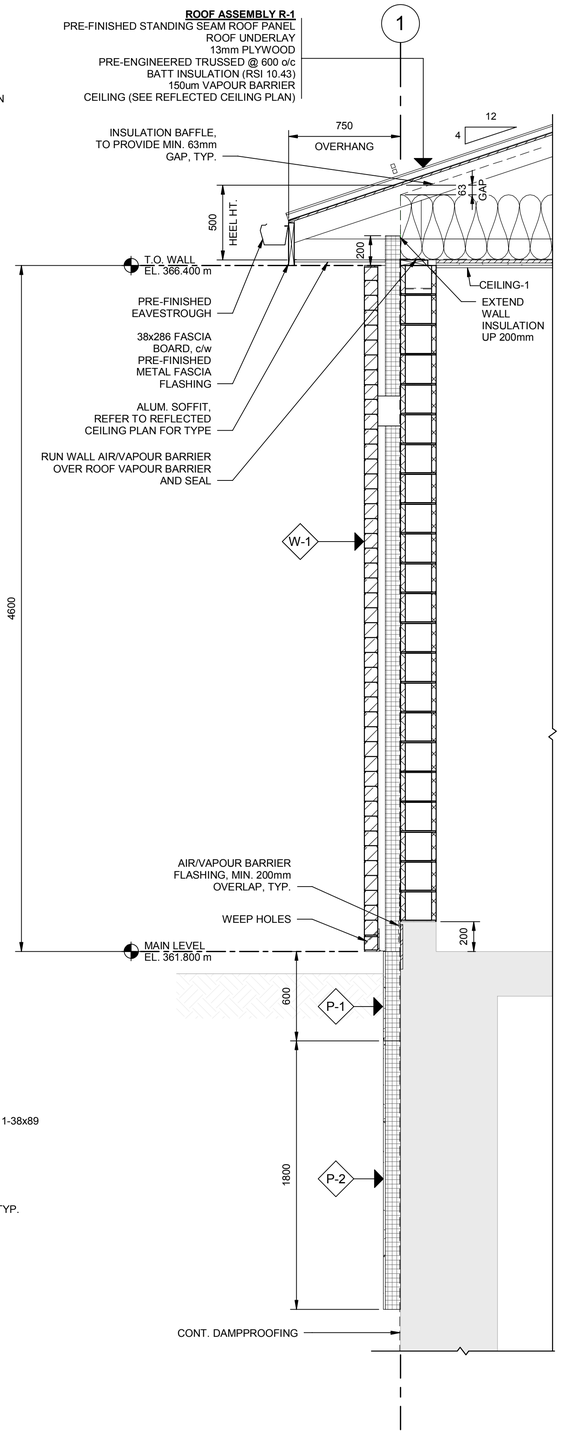

C | DETAIL
B300 | SCALE: 1 : 20

This drawing has been prepared for the use of AECOM's client and may not be used, reproduced or relied upon by third parties, except as agreed by AECOM and its client, as required by law or for use by governmental reviewing agencies. AECOM accepts no responsibility, and denies any liability whatsoever, to any party that modifies this drawing without AECOM's express written consent. Do not scale this document. All measurements must be obtained from the stated dimensions.

AECOM

PROJECT

City of Brandon
Kirkcaldy Lift Station

CLIENT

City of Brandon
Brandon, Manitoba

CONSULTANT

AECOM
99 Commerce Drive
Winnipeg, Manitoba R3P 0Y7
204.477.5381 tel 204.284.2040 fax
www.aecom.com

REGISTRATION

PROVINCE OF MANITOBA
M. M. HOQUE
Member
30114
REGISTERED PROFESSIONAL ENGINEER
2018-12-14

APEGM
Certificate of Authorization
AECOM Canada Ltd.
No. 4671 Date: 2018.12.14

ISSUE/REVISION

1	2018.12.14	ISSUED FOR CONSTRUCTION
0	2018.08.10	ISSUED FOR TENDER
I/R	DATE	DESCRIPTION

PROJECT NUMBER

60247924

SHEET TITLE

KIRKCALDY LIFT STATION
BUILDING
DETAILS

SHEET NUMBER

B400

Last Plotted: 12/18/2018 10:40:22 AM
Filename: P:\60247924\000-CAD\01-MODELS\S\Design Files\60247924-MOD-00-S_V17_klippenstinek.rvt

Printed on ___% Post-Consumer Recycled Content Paper

Project Management Initials:Designer: Designer Checked: Checker Approved: Approver ANSI D 559mm x 864mm

GENERAL NOTES

1. READ THE STRUCTURAL DRAWINGS IN CONJUNCTION WITH ALL OTHER PERTINENT CONTRACT DOCUMENTS.
2. ALL DIMENSIONS ARE IN METRIC UNITS UNLESS NOTED. THE CONTRACTOR SHALL CHECK AND VERIFY ALL DIMENSIONS SHOWN ON THE STRUCTURAL DRAWINGS AGAINST THE BUILDING, PROCESS, MECHANICAL, AND ELECTRICAL DRAWINGS THE EXISTING SITE CONDITIONS BEFORE BEGINNING CONSTRUCTION AND REPORT DISCREPANCIES TO THE ENGINEER BEFORE PROCEEDING WITH THE WORK. DO NOT SCALE DRAWINGS.
3. THE DESIGN AND CONSTRUCTION SHALL BE IN ACCORDANCE WITH THE NATIONAL BUILDING CODE OF CANADA 2010 AND MANITOBA AMENDMENTS, IT'S SUPPLEMENTS AND THE LATEST EDITIONS OF REFERENCED CODES AND STANDARDS THEREIN, UNLESS NOTED OTHERWISE. BUILDING IMPORTANCE CATEGORY: POST-DISASTER.
4. REFER TO THE BUILDING, PROCESS, MECHANICAL AND ELECTRICAL DRAWINGS FOR LOCATIONS AND DIMENSIONS OF OPENINGS, SLEEVES AND OTHER BUILDING COMPONENTS NOT SHOWN ON THE STRUCTURAL DRAWINGS. REPORT DISCREPANCIES AND OBTAIN ENGINEER'S PRIOR APPROVAL BEFORE INSTALLING SLEEVES AND OPENINGS THAT ARE NOT INDICATED ON THE STRUCTURAL DRAWINGS BEFORE PROCEEDING WITH CONSTRUCTION.
5. REFER TO BUILDING, PROCESS, MECHANICAL AND ELECTRICAL DRAWINGS FOR LOCATION OF PITS, BASES, DRAINS, TRENCHES, SUMPS, HOUSEKEEPING PADS, DEPRESSIONS, GROOVES, CURBS, CHAMFERS AND SLOPES NOT SHOWN ON THE STRUCTURAL DRAWINGS.
6. CONTRACTOR TO CONFIRM WITH EQUIPMENT SUPPLIERS DIMENSIONS AND ALL OTHER CRITICAL DETAILS PRIOR TO CONSTRUCTION AND INSTALLATION. REPORT DISCREPANCIES AND OBTAIN APPROVAL PRIOR TO CONSTRUCTION.
7. NOTIFY THE ENGINEER 48 HOURS IN ADVANCE FOR SITE REVIEW.
8. DRAWINGS SHOW COMPLETED STRUCTURES ONLY. PROVIDE TEMPORARY BRACING FOR CONSTRUCTION LOADING CONDITIONS AND STABILITY OF THE STRUCTURE DURING CONSTRUCTION. CONSTRUCTION LOADS SHALL NOT EXCEED THE DESIGN LOADS SHOWN ON DRAWINGS.
9. CONSTRUCTION METHODS REQUIRING TEMPORARY SHORING, OR BRACING, SHALL BE SUBMITTED TO THE ENGINEER FOR REVIEW. THE CONTRACTOR SHALL RETAIN A PROFESSIONAL ENGINEER, REGISTERED IN THE PROVINCE OF MANITOBA, TO PROVIDE ENGINEERING DESIGN AND TAKE RESPONSIBILITY FOR ANY SHORING AND BRACING OR OTHER WORK REQUIRING ENGINEERING DESIGNS TO COMPLETE THE CONSTRUCTION.
10. VERIFY LOCATION OF UNDERGROUND SERVICES AND BE RESPONSIBLE FOR DISRUPTIONS.
12. ALL SHOP DRAWING SUBMITTALS TO BE METRIC (MILLIMETRES) UNLESS NOTED.

EXCAVATION & BACKFILL

1. EXCAVATE TO LINES AND LEVELS NECESSARY TO PROPERLY COMPLETE THE WORK. CONTROL EXCAVATION TO ENSURE BOTTOM OF EXCAVATION DOES NOT SOFTEN DUE TO EXCESS MOISTURE. REFERENCE THE GEOTECHNICAL REPORT FOR FURTHER INFORMATION.
2. ALL BACKFILL SHALL BE COMPACTED USING MECHANICAL EQUIPMENT. ON THE EXTERIOR OF THE STRUCTURES, THE BACKFILLING SHALL BE PLACED WITH SUFFICIENT ALLOWANCE FOR SETTLEMENT AND IN GENERAL, ITS TOP SURFACE SHALL BE NEATLY GRADED.
3. MAINTAIN OPTIMUM MOISTURE CONTENT TO PERMIT COMPACTION TO ATTAIN SPECIFIED DENSITIES. PROTECT BACKFILLED GRADE, DURING AND AFTER COMPLETION OF BACKFILL OPERATION, FROM SOFTENING DUE TO EXCESS MOISTURE.
4. BACKFILL TO GRADES INDICATED IN LAYERS NOT EXCEEDING 300mm UNCOMPACTED, UNLESS NOTED OTHERWISE.

FOUNDATION

1. GEOTECHNICAL REPORT IS AVAILABLE AS REFERENCED IN THE CONTRACT SPECIFICATIONS.
2. ALLOWABLE BEARING CAPACITY FOR RAFT FOUNDATION IS AVAILABLE IN GEOTECHNICAL REPORT.
3. MODULUS OF SUBGRADE REACTION AT FOUNDATION LEVEL IS AVAILABLE IN GEOTECHNICAL REPORT.
4. BEARING SURFACES FOR RAFT FOUNDATIONS SHALL BE REVIEWED AND ACCEPTED BY THE CONTRACT ADMINISTRATOR PRIOR TO CASTING OF CONCRETE. PROTECT BEARING SURFACES. DO NOT PLACE CONCRETE ON FROZEN SOIL.
5. PREVENT SUBGRADE FROM FREEZING AFTER CASTING CONCRETE WORKS UNTIL CONSTRUCTION IS COMPLETE AND STRUCTURES ARE IN SERVICE.

DESIGN LOADS

1. THE STRUCTURE IS DESIGNED TO MEET THE REQUIREMENTS OF THE NATIONAL BUILDING CODE OF CANADA 2010.
2. WIND LOADS - THE BUILDING STRUCTURE IS DESIGNED TO RESIST THE HORIZONTAL LOADS RESULTING FROM A 1/50 AVERAGE HOURLY WIND PRESSURE BASED ON A q(1/50)=0.49 kPa WITH AN IMPORTANCE CATEGORY OF POST-DISASTER.
3. SNOW LOADS: THE ROOF AREA ARE DESIGNED BASED ON:
   GROUND SNOW LOAD = 2.1 kPa
   RAIN LOAD = 0.20 kPa
4. FLOOR LOADS - REFER TO STRUCTURAL DRAWINGS.

MASONRY

1. ALL MASONRY WORK SHALL CONFORM TO CSA S304.1, A371 AND TO DETAILS SHOWN ON DRAWINGS.
2. MASONRY BLOCK UNITS SHALL CONFORM TO CSA A165, CLASSIFICATION H/15/A/M WITH A MINIMUM UNIT STRENGTH OF 15 MPa, UNLESS NOTED OTHERWISE.
3. ALL MORTAR SHALL CONFORM TO CSA A179 AND SHALL BE TYPE 'S'.
4. LINTELS, BOND BEAMS, AND REINFORCED CORES SHALL BE FILLED WITH CONCRETE HAVING A MINIMUM COMPRESSIVE STRENGTH OF 20 MPA.
5. PROVIDE DOWELS FROM CONCRETE BEAMS, WALL AND FLOORS TO MATCH MASONRY WALL REINFORCING UNLESS NOTED OTHERWISE.

CONCRETE REINFORCEMENT

1. DEFORMED BARS CONFORMING TO CSA G30.18 GRADE 400. LAP SPLICES SHALL BE CLASS B TENSION LAP TYPE AS NOTED IN THE BELOW TABLE, UNLESS NOTED OTHERWISE.
2. WELDABLE REINFORCING BARS SHALL CONFORM TO CSA G30.18 GRADE 400W. WELDING OF REINFORCING SHALL CONFORM TO CSA W186.
3. REINFORCING WORK SHALL BE IN ACCORDANCE WITH CSA A23.1 AND CSA A23.3.
4. REINFORCING STEEL SHALL BE DETAILED IN ACCORDANCE WITH THE LATEST EDITION OF THE REINFORCING STEEL INSTITUTE OF CANADA DETAILING MANUAL.
5. 90° HOOKS AND 180° HOOKS WHERE SHOWN SHALL BE DETAILED AS STANDARD HOOKS UNLESS NOTED OTHERWISE.
6. CONCRETE COVER TO REINFORCING STEEL SHALL CONFORM TO THE MOST STRINGENT REQUIREMENT LISTED BELOW UNLESS NOTED OTHERWISE:

PUMP STATION - ITEM	COVERAGE (mm)
LOWER LEVEL BASE SLABS (BOTTOM)	75
WALLS (BOTH FACES)	60
MAIN FLOOR, INTERMEDIATE LEVEL, AND LOWER LEVEL SLABS TOP	50
MAIN FLOOR, INTERMEDIATE LEVEL, AND LOWER LEVEL SLABS SIDES	50
MAIN FLOOR INTERMEDIATE LEVEL SLABS BOTTOM	50
CONCRETE BEAMS: SIDE (TO OUTSIDE FACE OF STIRRUP)	50
CONCRETE BEAMS: TOP AND BOTTOM (TO OUTSIDE FACE OF STIRRUP)	50
CURBS	50
FORMED SURFACES NOT EXPOSED TO GROUND, WATER, OR WEATHER NOT LISTED ABOVE	50
HOUSEKEEPING PADS	50

MIX TYPE	INTENDED APPLICATION	MINIMUM COMPRESSIVE STRENGTH (MPa)	CLASS OF EXPOSURE
1	STRUCTURAL CONCRETE USED IN PORTIONS OF THE BUILDING FOR WATER RETENTION AND CONCRETE IN CONTACT WITH SOILS: -LOWER LEVEL SLAB -ALL LOWER LEVEL WALLS	35 (28-DAY)	C-1*
2	STRUCTURAL CONCRETE FOR STRUCTURES NOT IN CONTACT WITH SOILS AND A WATER RETAINING COMPONENT: -EXTERIOR MAIN FLOOR OVER WET WELL AND PUMP ROOM -INTERIOR MAIN FLOOR CONCRETE BEAMS	35 (28-DAY)	C-1*
3	STRUCTURAL CONCRETE FOR STRUCTURES NOT IN CONTACT WITH SOILS AND NOT A WATER RETAINING COMPONENT: -INTERIOR MAIN FLOOR AT UTILITY ROOM AREA -INTERIOR MAIN FLOOR CONCRETE BEAMS	35 (28-DAY)	N
4	STRUCTURAL CONCRETE FOR STRUCTURES NOT IN CONTACT WITH SOILS AND NOT A WATER RETAINING COMPONENT: -CURBS FOR HATCHES	35 (28-DAY)	N
5	-BUILDING PERIMETER CONCRETE CURBS -EXTERIOR CONCRETE CURB AND SLAB ON GRADE	32 (28-DAY)	C-2
6	NON-STRUCTURAL INTERIOR HOUSEKEEPING PADS	30 (28-DAY)	N
7	LEAN MIX	20 (28-DAY)	N

* THE CRYSTALLINE WATERPROOFING ADDITIVES SHALL BE INTEGRAL TO MIX TYPE.

WATERSTOPS

1. WATER STOPS ARE SHOWN ON PLANS AND SECTIONS FOR INFORMATION ONLY. IN GENERAL ALL CONSTRUCTION JOINTS IN LIQUID RETAINING STRUCTURES AND ALL JOINTS BELOW GRADE ARE TO BE WATERSTOPPED.
2. CONSTRUCTION JOINTS ARE SHOWN FOR INFORMATION ONLY AND THE CONTRACTOR IS ENCOURAGED TO REVIEW CONSTRUCTION PROCEDURES AND PROPOSE ALTERNATIVE CONSTRUCTION JOINT LOCATION TO EXPEDITE THE WORK. THE ENGINEER MUST APPROVE ALL REVISED JOINT LOCATION.
3. WATERSTOPS TO BE 150 PVC AS PER SPECIFICATIONS. SUBSTITUTIONS WILL NOT BE ALLOWED WITHOUT WRITTEN APPROVAL FROM THE ENGINEER.

MISCELLANEOUS METALS

1. THE STEEL ERECTOR SHALL BE RESPONSIBLE FOR SUPPLING AND ERECTING ALL TEMPORARY WORKS REQUIRED FOR THE STRUCTURE DURING ERECTION.
2. WELD TO CSA W59 BY FABRICATORS QUALIFIED TO CSA W47.1, IN DIVISION 2.
3. ISOLATE MISC. METALS FROM FOLLOWING COMPONENTS BY MEANS OF 2 COATS OF AKALI RESISTANT BITUMINOUS PAINT:
   .1 DISSIMILAR METALS EXCEPT STAINLESS STEEL, GALVANIZED STEEL, ZINC, OR WHITE BRONZE OF SMALL AREA.
   .2 CONCRETE, MORTAR AND MASONRY.
4. STEEL PLATES: CONFORMING TO CAN/CSA G40.21; TYPE W WITH A MINIMUM YIELD STRENGTH OF 300 MPa.
5. ANCHOR RODS: CONFORMING TO ASTM F1554.
6. WELDING MATERIALS: CONFORMING TO CSA W59.
7. WELDING OF ALL LOAD CARRYING ASSEMBLIES IS TO BE PERFORMED BY A FIRM CERTIFIED BY THE CANADIAN WELDING BUREAU TO THE REQUIREMENTS OF CSA W47.1 IN DIVISION 2.
8. SUPPLY ALL COMPONENTS REQUIRED FOR PROPER ANCHORAGE OF STEEL FABRICATIONS. FABRICATE ANCHORAGE AND RELATED COMPONENTS OF SAME MATERIAL AND FINISH AS STEEL FABRICATIONS, UNLESS OTHERWISE SPECIFIED OR SHOWN.
9. NELSON STUDS: H4L HEADED STUDS BY NELSON STUD, A DONCASTERS GROUP LIMITED COMPANY.
10. GALVANIZED LOOSE LAID ANGLE SIZING:
    <1200mm CLEAR SPAN GALV. L102x102x6.4
    1200mm BUT < 2400mm GALV. 102x102x9.5
    >2400mm GALV. LLV152x102x9.5

PLASTIC FABRICATIONS

1. INSTALLATION IN ACCORDANCE WITH MANUFACTURER'S SHOP DRAWINGS.
2. FRP ANGLES BY FIBERGRATE.
   REFER TO DRAWINGS AND SPECIFICATIONS FOR LOCATIONS AND DETAILS.

ALUMINUM FABRICATIONS

1. DESIGN, FABRICATION AND INSTALLATION IN ACCORDANCE WITH CSA S157.
2. PERFORM WELDING OF ALUMINUM IN ACCORDANCE WITH REQUIREMENTS OF CSA W59.2 AND CSA S244.
3. ALUMINUM TO CSA/CAN 3-S157, 6061-T6 OR 6063-T6 ALUMINUM ALLOY.
4. BOLTS AND ANCHOR BOLTS: STAINLESS STEEL.
5. ISOLATE ALUMINUM FROM FOLLOWING COMPONENTS, BY MEANS OF BITUMINOUS PAINT:
   .1 DISSIMILAR METALS EXCEPT STAINLESS STEEL AND GALVANIZED STEEL.
   .2 CONCRETE, MORTAR AND MASONRY.

REINFORCING BAR SPLICES PER ACI 318	
f'c = 35 MPa	fy = 400 MPa
BAR SIZE	CLASS 'B' SPLICE
10M	530mm
15M	915mm
20M	1100mm
25M	1830mm

REINFORCING BAR DEVELOPMENT PER ACI 318			
f'c = 35 MPa			fy = 400 MPa
BAR SIZE	BAR DEVELOPMENT	COMPRESSION DEVELOPMENT	STANDARD HOOK DEVELOPMENT
10M	430mm	200mm	150mm
15M	710mm	280mm	280mm
20M	840mm	355mm	330mm
25M	1420mm	460mm	430mm

WOOD

1. WOOD CONSTUCTION SHALL CONFORM TO CSA 086-09 AND PART 9 OF NBC 2010.
2. ROOF SHEATHING: DOUGLAS FIR PLYWOOD TO CSA-0121,OR CANADIAN SOFTWOOD PLYWOOD TO CSA-015.
3. WOOD FRAMING MATERIAL (UNLESS NOTED OTHERWISE SPECIFIED): S-P-F OR D.FIR.L NO.1/NO.2 (S-DRY)
   ROOF TRUSSES: KILN DRIED
4. ALL TRUSSES AND FRAMING DELIVERED TO THE SITE SHALL BE KEPT DRY. NO WARPED MATERIAL SHALL BE USED.
5. PREFABRICATE WOOD TRUSSES TO PROFILES, DIMENSIONS AND LOADS SHOWN ON DRAWINGS. SUPPLIER TO DESIGN TRUSSES WITH CONSIDERATION OF TRANSPORTATION, FABRICATION, AND ERECTION, UNDER PART 4 OF NBC 2010 AND IN ACCORDANCE WITH CSA 086-09.
6. SUBMIT SHOP DRAWINGS TO THE ENGINEER OR REVIEW PRIOR TO FABRICATION. SHOP DRAWINGS SHALL BE SEALED BY A PROFESSIONAL ENGINEER REGISTERED IN THE PROVINCE OF MANITOBA. SHOP DRAWINGS SHALL INDICATE DESIGN LOADS, LUMBER SPECIES AND GRADES, SPACING OF TRUSSES, JOINT DETAILS AND CONNECTOR CAPACITIES, MEMBER FORCES, REACTIONS, AND CAMBER.
7. INSTALL SHEATHING TO PRIMARY FRAMING BEFORE INSTALLING VALLEY JACK RAFTERS AND SECONDARY FRAMING.
8. INSTALL ALL NECESSARY BRIDGING, BRACING AND BLOCKS.

STRUCTURAL STANDARD ABBREVIATIONS:

ACOUSTIC	ACST	HANGER	HGR
ADDITIONAL	ADD'L	HEIGHT	HT
ADHESIVE	ADH	HEXAGON	HEX
ADJUSTABLE	ADJ	HOLLOW STRUCTURAL STEEL	HSS
AGGREGATE	AGGR	HORIZONTAL	HORIZ
AIR HANDLING UNIT	A.H.U.	INCLUSIVE	INCL
AIR VAPOUR BARRIER	A.V.B.	INSIDE DIAMETER	I.D.
ALTERNATE	ALTER	INSIDE FACE	I.F.
ALUMINUM	ALUM	INTERIOR	INT
ANCHOR BOLT	A. BOLT	INVERT ELEVATION	INVT EL
APART	APT	JUNCTION	JCT
APPROXIMATE	APPROX	KILONEWTON	kN
BUILDING	BUILDING	KNOCK DOWN	K.D.
AT	@	LIVE LOAD	L.L.
AVERAGE	AVG	LONG	LG.
BEARING	BRG	LONG LEG HORIZONTAL	L.L.H.
BENCH MARK	B.M.	LONG LEG VERTICAL	L.L.V.
BETWEEN	BET	LOUVER	LVR
BOARD	BD	MAKE UP AIR UNIT	MAU
BOTH SIDES	B.S.	MANUFACTURE	MFG
BOTH WAYS	B.W.	MARK	MK
BOTTOM	BOT	MASONRY OPENING	M.O.
BOTTOM LOWER LAYER	BLL	MATERIAL	MATL
BOTTOM UPPER LAYER	BUL	MAXIMUM	MAX
BUILDING	BLDG	MECHANICAL	MECH
BY (BETWEEN DIMS)	x (lower case)	METRE	m (lower case)
CAST IN PLACE	C.I.P.	MILLIMETRE	mm (lower case)
CAST IRON	C.I.	MINIMUM	MIN
CATCH BASIN	C.B.	MISCELLANEOUS	MISC
CEMENT BOARD	C.BD.	NEAR FACE	N.F.
CENTERLINE	C	NEAR SIDE	N.S.
CENTER TO CENTER	C/C	NORTH	N
CIRCULAR	CIRC	NOT APPLICABLE	N/A
CLEAN OUT	C.O.	NOT IN CONTRACT	N.I.C.
CLEAR SPAN	CL. SPAN	NOT TO SCALE	N.T.S.
COLUMN	COL	NUMBER	No.
COMPLETE WITH	c/w	ON CENTER	o/c (lower case)
CONCRETE	CONC	OPENING	OPG
CONCRETE MASONRY UNIT	CMU	OPEN WEB STEEL JOIST	O.W.S.J.
CONCRETE PIPE	C.P.	OPPOSITE	OPP
CONSTRUCTION	CONSTR	ORIGINAL	ORIG
CONSTRUCTION JOINT	C.J.	OUTSIDE DIAMETER	O.D.
CONTINUOUS	CONT	OUTSIDE FACE	O.F.
CORRUGATED METAL PIPE	C.M.P.	OUT TO OUT	O/O
COUNTERSUNK	CSK	OVERHEAD	O/H
DEAD LOAD	D.L.	PERPENDICULAR	PERP
DEGREE	°	PLATE	PL
DIAMETER	DIA	POUNDS PER LINEAR FOOT	PLF
DIMENSION	DIM	POUNDS PER SQUARE FOOT	PSF
DOWN	DN	PLYWOOD	PLYWD
DOWEL	DWL	PRE-CAST	P/C
DRAWING	DWG	PREFABRICATED	PREFAB
EACH FACE	E.F.	PREFINISHED	PREFIN
EACH WAY	E.W.	PRELIMINARY	PRELIM
EAST	E	PROJECTION	PROJ
ELECTRICAL	ELECT	QUANTITY	QTY
ELEVATION	EL	RADIUS	R
ELEVATOR	ELEV	REFERENCE	REF
EQUAL	EQ.	REINFORCE WITH	R/W
EQUAL SPACE	EQ SP	REINFORCING	REINF
EXCAVATION	EXC	REQUIRED	REQ'D
EXISTING	EXIST	RETAINING WALL	R.W.
EXPANSION	EXP	REVISION	REV
EXPANSION JOINT	E.J.	ROOF DRAIN	R.D.
EXTERIOR	EXT	ROUGH OPENING	R.O.
FACE TO FACE	F/F	SCHEDULE	SCHED
FACE OF CONCRETE	F.O.C.	SECTION	SECT
FAR SIDE	F.S.	SELF ADHESIVE	S.A.
FIBREBOARD	FBRBD	SHEATHING	SHTG
FINISH	FIN	SHEET	SHT
FLOOR DRAIN	F.D.	SIMILAR	SIM
FOUNDATION	FDN	SKETCH	SK
FOOTING	FTG	SOUTH	S
GALVANIZE	GALV	SPECIFICATION	SPEC
GALVANIZED IRON	G.I.	SQUARE FEET	SQ. FT.
GAUGE	GA	STAINLESS STEEL	S.S.
GRANULAR	GRAN	STANDARD	STD
GRANULAR BASE	G.B.	STIFFENER	STIFF
GRANULAR BACK FILL	GBFL	STIRRUP	STIRR
GRID LINE	G.L.	STRUCTURAL	STRUCT
GUARD RAIL	G.R.	SYMMETRICAL	SYM
		TANGENT	TAN
		TEMPORARY	TEMP
		TO MATCH EXISTING	T.M.E.
		TOP OF	T.O.
		TOP LOWER LEVEL	TLL
		TOP UPPER LEVEL	TUL
		TYPICAL	TYP
		UNDERCUT	U. CUT
		UNLESS NOTED	U/N
		VERTICAL	VERT
		WEIGHT	WT
		WIND LOAD	W.L.
		WITH	w/
		WITH OUT	W/O
		WOOD	WD
		WROUGHT IRON	W.I.

This drawing has been prepared for the use of AECOM's client and may not be used, reproduced or relied upon by third parties, except as agreed by AECOM and as set, as required by law or for use by governmental reviewing agencies. AECOM accepts no responsibility, and denies any liability whatsoever, to any party that modifies this drawing without AECOM's express written consent. Do not scale this document. All measurements must be obtained from the stated dimensions.

AECOM

PROJECT

City of Brandon
Kirkcaldy Lift Station

CLIENT

City of Brandon
Brandon, Manitoba

CONSULTANT

AECOM
99 Commerce Drive
Winnipeg, Manitoba R3P 0Y7
204.477.5381 tel 204.284.2040 fax
www.aecom.com

REGISTRATION

PROVINCE OF MANITOBA
M. Hoque
M. M. HOQUE
Member
30114
REGISTERED PROFESSIONAL ENGINEER
2018-12-14

APEGM
Certificate of Authorization
AECOM Canada Ltd.
No. 4671 Date: 2018.12.14

ISSUE/REVISION

I/R	DATE	DESCRIPTION
1	2018.12.14	ISSUED FOR CONSTRUCTION
0	2018.08.10	ISSUED FOR TENDER

PROJECT NUMBER

60247924

SHEET TITLE

KIRKCALDY LIFT STATION
STRUCTURAL
GENERAL NOTES

SHEET NUMBER

S001

Last Plotted: 12/18/2018 10:42:39 AM
Filename: P:\60247924\000-CAD\01-MODELS\S\Design Files\60247924-MOD-00-S_V17_klippenstinek.rvt

Printed on ___% Post-Consumer Recycled Content Paper

CONCRETE SLAB SCHEDULE							
		REINFORCING BAR DETAILS					
MARK	DEPTH	TUL REINF	TLL REINF	BUL REINF	BLL REINF	ADD'L REINF	REMARKS
SL-1	800	20M @ 150 o/c T&B @ E.W.	20M @ 150 o/c T&B @ E.W.	20M @ 150 o/c T&B @ E.W.	20M @ 150 o/c T&B @ E.W.		
SL-2	300	15M @ 150 o/c T&B @ E.W.	15M @ 150 o/c T&B @ E.W.	15M @ 150 o/c T&B @ E.W.	15M @ 150 o/c T&B @ E.W.		
SL-3	300	15M @ 150 o/c T&B @ E.W.	15M @ 150 o/c T&B @ E.W.	15M @ 150 o/c T&B @ E.W.	15M @ 150 o/c T&B @ E.W.		
SL-4	300	15M @ 150 o/c T&B @ E.W.	15M @ 150 o/c T&B @ E.W.	15M @ 150 o/c T&B @ E.W.	15M @ 150 o/c T&B @ E.W.		
SL-5	300	15M @ 150 o/c T&B @ E.W.	15M @ 150 o/c T&B @ E.W.	15M @ 150 o/c T&B @ E.W.	15M @ 150 o/c T&B @ E.W.		

CONCRETE WALL SCHEDULE					
		REINFORCING BAR DETAILS			
MARK	THICKNESS	HORIZONTAL	VERTICAL	ADD'L	REMARKS
CW-1	650	25M@150 o/c	25M@150 o/c	REFER TO DETAIL	
CW-2	500	20M@200 o/c	20M@200 o/c	REFER TO DETAIL	
CW-3	450	20M@200 o/c	20M@200 o/c	REFER TO DETAIL	
CW-4	300	15M@200 o/c	15M@200 o/c	REFER TO DETAIL	

CONCRETE BEAM SCHEDULE							
			REINFORCING BAR DETAILS				
Mark	WIDTH	DEPTH	TOP	BOTTOM	ADDITIONAL	STIRRUPS	REMARKS
CB-1	450	650	10-25M	10-25M		10M@150 o/c	
CB-2	350	500	6-25M	6-25M		10M@250 o/c	
CB-3	450	650	8-25M	8-25M		10M@250 o/c	

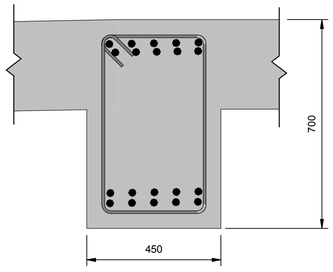

CB-1

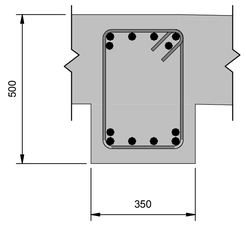

CB-2

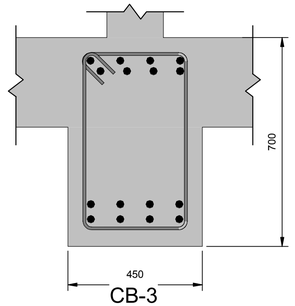

CB-3

MASONRY WALL SCHEDULE				
MARK	WIDTH	VERTICAL	HORIZONTAL	REMARKS
MW-1	240	15M@1000 o/c	LADDER REINFORCING @ 400 o/c	DOWELS TO BE 1200 LG EMBEDDED INTO CONCRETE, SPACING TO MATCH VERTICALS
MW-2	190	15M@1000 o/c	LADDER REINFORCING @ 400 o/c	DOWELS TO BE 1200 LG EMBEDDED INTO CONCRETE, SPACING TO MATCH VERTICALS

MASONRY LINTEL SCHEDULE					
MARK	DEPTH	TOP REINF	BOTTOM REINF	STIRRUPS	REMARKS
ML-1	190	-	2-15M CONT.	-	WIDTH TO MATCH CMU
ML-2	390	1-15M CONT.	1-20M CONT.	10M@100 o/c	WIDTH TO MATCH CMU
ML-3	590	2-15M CONT.	2-20M CONT.	10M@100 o/c	WIDTH TO MATCH CMU

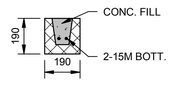

ML-1

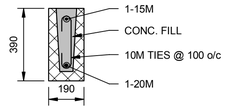

ML-2

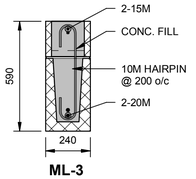

ML-3

CONCRETE CURB SCHEDULE					
			REINFORCING BAR DETAILS		
MARK	WIDTH	DEPTH	HORIZONTAL	STIRRUPS	REMARKS
CURB-1	240	400	2x 2-15M	10M @ 200 o/c	
CURB-2	240	200	2-15M	10M @ 300 o/c	
CURB-3	190	200	2-15M	10M @ 300 o/c	
CURB-4	200	250	2-15M	10M U-BARS @ 300 o/c + 10M BENT BARS @ 300 o/c	
CURB-5	600	200	5-15M	10M U-BARS @ 300 o/c	

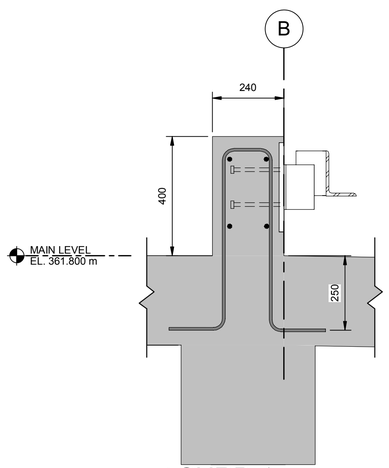

CURB-1

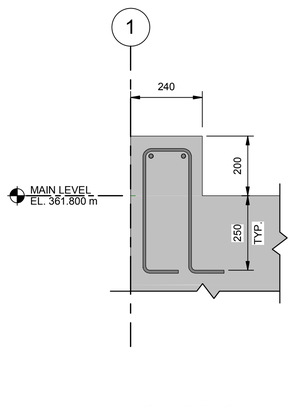

CURB-2

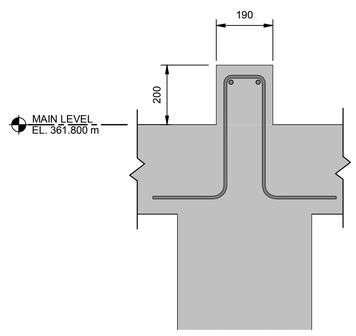

CURB-3

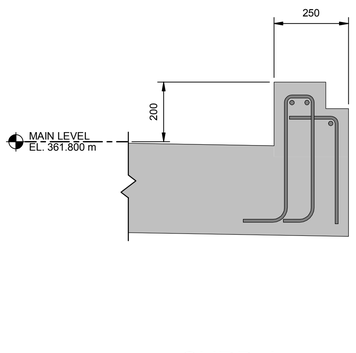

CURB-4

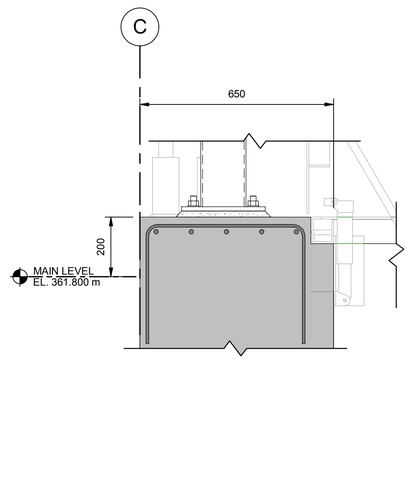

CURB-5

This drawing has been prepared for the use of AECOM's client and may not be used, reproduced or relied upon by third parties, except as agreed by AECOM and as required by law or for use by governmental reviewing agencies. AECOM accepts no responsibility, and denies any liability whatsoever to any party that modifies this drawing without AECOM's express written consent. Do not scale this document. All measurements must be obtained from the stated dimensions.

AECOM

PROJECT

City of Brandon
Kirkcaldy Lift Station

CLIENT

City of Brandon
Brandon, Manitoba

CONSULTANT

AECOM
99 Commerce Drive
Winnipeg, Manitoba R3P 0Y7
204.477.5381 tel 204.284.2040 fax
www.aecom.com

REGISTRATION

PROVINCE OF MANITOBA
M. M. HOQUE
Member
30114
REGISTERED PROFESSIONAL ENGINEER
2018-12-14

APEGM
Certificate of Authorization
AECOM Canada Ltd.
No. 4671 Date: 2018.12.14

ISSUE/REVISION

I/R	DATE	DESCRIPTION
1	2018.12.14	ISSUED FOR CONSTRUCTION
0	2018.08.10	ISSUED FOR TENDER

PROJECT NUMBER

60247924

SHEET TITLE

KIRKCALDY LIFT STATION
STRUCTURAL
SCHEDULES
CURB DETAILS

SHEET NUMBER

S002

Project Management Initials:Designer: Designer Checked: Checker Approved: Approver ANSI D 559mm x 864mm
Last Plotted: 12/18/2018 10:42:40 AM
Filename: P:\60247924\000-CAD\01-MODELS\S\Design Files\60247924-MOD-00-S_V17_klipperstinek.rvt
Printed on ___% Post-Consumer Recycled Content Paper

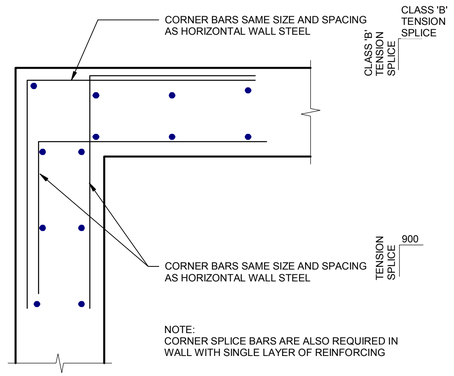

1 STD DETAIL - WALL CORNER REINFORCING DETAIL

SCALE: 1 : 20

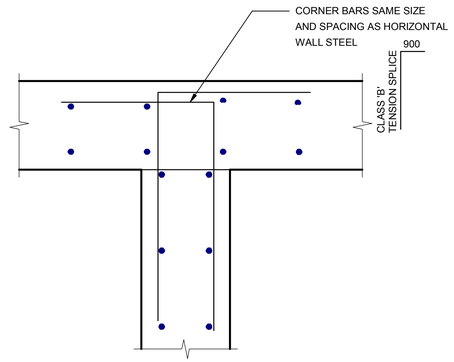

2 STD DETAIL - WALL INTERSECTION REINFORCING DETAIL

SCALE: 1 : 20

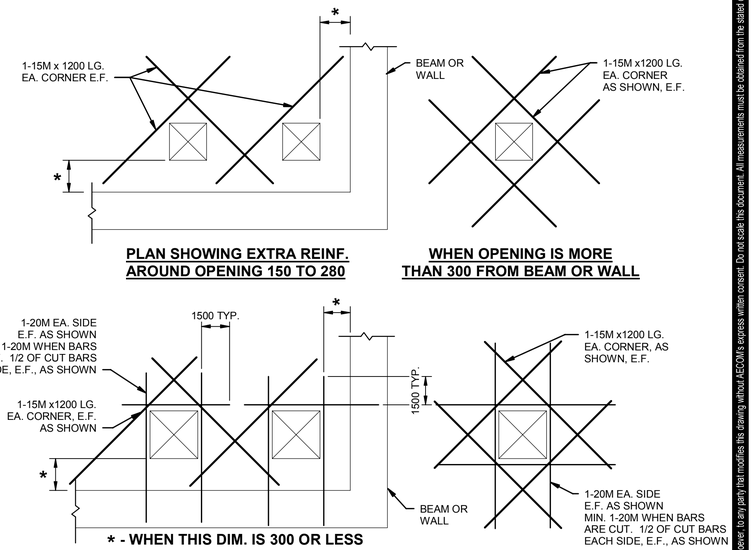

1. NUMBER OF REINFORCING BARS TO BE CUT AT OPENING TO BE KEPT AT A MINIMUM. DEFLECT AS MANY BARS AS POSSIBLE AROUND OPENING.
2. REINFORCING BARS TO BE KEPT MINIMUM 50 CLEAR OF OPENING.
3. CIRCULAR OPENINGS TO BE TREATED IN SAME MANNER AS RECTANGULAR UNLESS OTHERWISE DETAILED.

3 STD DETAIL - ADDITIONAL REINFORCING AROUND OPENINGS WALLS AND SLABS

SCALE: 1 : 20

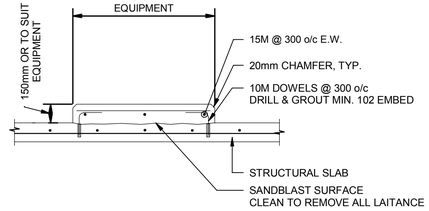

6 STD DETAIL - HOUSEKEEPING PAD

SCALE: NTS

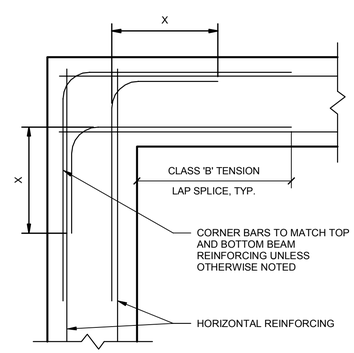

4 STD DETAIL - BEAM CORNER REINFORCING DETAIL

SCALE: NTS

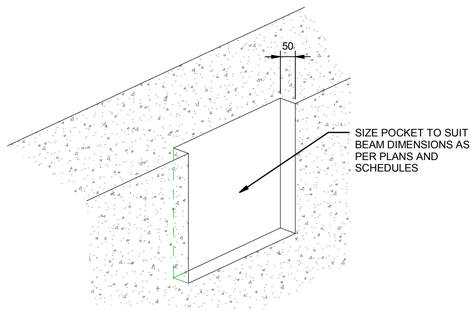

5 STD DETAIL - TYPICAL BEAM POCKET

SCALE: 1 : 10

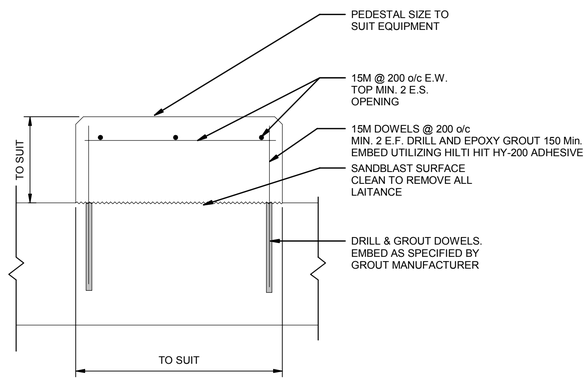

7 STD DETAIL - PUMP PEDESTAL

SCALE: 1 : 10

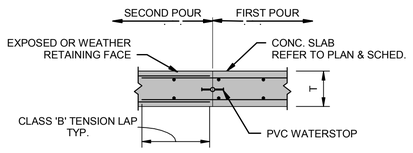

8 STD DETAIL JOINT (T ≤600mm)

SCALE: 1 : 20

This drawing has been prepared for the use of AECOM's client and may not be used, reproduced or relied upon by third parties, except as agreed by AECOM and its client, as required by law or for use by governmental reviewing agencies. AECOM accepts no responsibility, and denies any liability whatsoever, to any party that modifies this drawing without AECOM's express written consent. Do not scale this document. All measurements must be obtained from the stated dimensions.

AECOM

PROJECT

City of Brandon
Kirkcaldy Lift Station

CLIENT

City of Brandon
Brandon, Manitoba

CONSULTANT

AECOM
99 Commerce Drive
Winnipeg, Manitoba R3P 0Y7
204.477.5381 tel 204.284.2040 fax
www.aecom.com

REGISTRATION

PROVINCE OF MANITOBA
M. M. HOQUE
Member 30114
REGISTERED PROFESSIONAL ENGINEER
2018-12-14

APEGM
Certificate of Authorization
AECOM Canada Ltd.
No. 4671 Date: 2018.12.14

ISSUE/REVISION

I/R	DATE	DESCRIPTION
1	2018.12.14	ISSUED FOR CONSTRUCTION
0	2018.08.10	ISSUED FOR TENDER

PROJECT NUMBER

60247924

SHEET TITLE

KIRKCALDY LIFT STATION
STRUCTURAL
STANDARD DETAILS

SHEET NUMBER

S003

Project Management Initials:Designer: KK/JT Checked: Checker Approved: Approver ANSI D 559mm x 864mm
Last Plotted: 12/18/2018 10:42:41 AM
Filename: P:\60247924\000-CAD\01-MODELS\SDesign Files\60247924-MOD-00-S_V17_klippenstinek.rvt
Printed on ___% Post-Consumer Recycled Content Paper

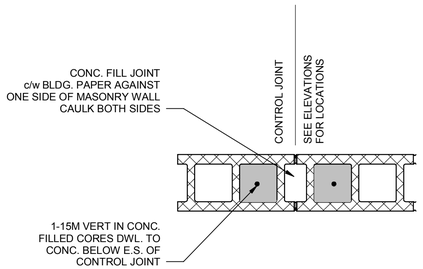

9 STD DETAIL - CMU CONTROL JOINT DETAIL
SCALE: 1 : 10

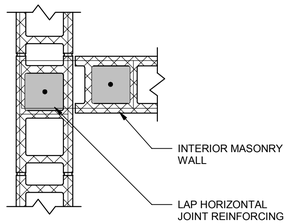

10 STD DETAIL - CMU INTERSECTING WALL DETAIL
SCALE: 1 : 10

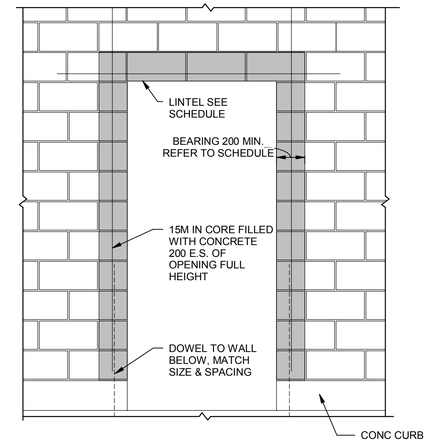

11 STD DETAIL - CMU WALK-IN DOOR DETAIL
SCALE: 1 : 20

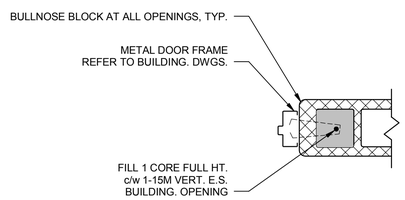

12 STD DETAIL - CMU DOOR JAMB REINFORCING DETAIL
SCALE: 1 : 10

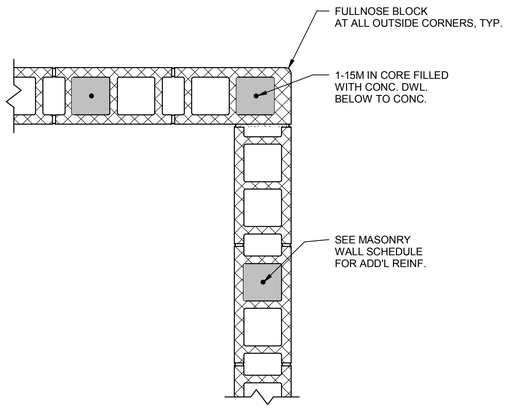

MASONRY WALL VERTICAL REINFORCING SHALL BE INSTALLED AT ALL CORNERS IN MASONRY WALLS & AT END OF MASONRY WALLS.

13 STD DETAIL - CMU REINFORCING DETAIL
SCALE: 1 : 10

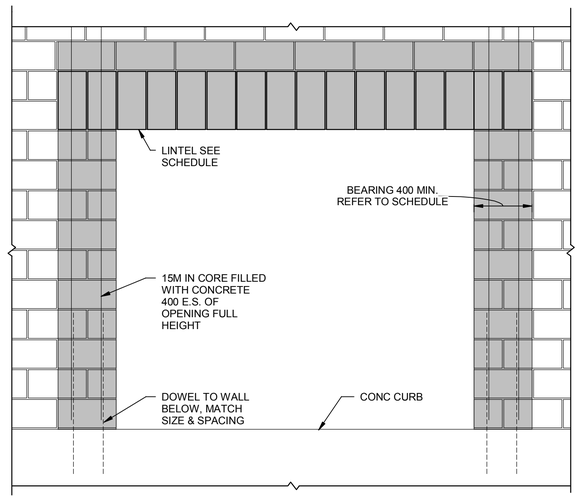

STD DETAIL
14 CMU LOUVER OPENING
SCALE: 1 : 20

AECOM

PROJECT

City of Brandon
Kirkcaldy Lift Station

CLIENT

City of Brandon
Brandon, Manitoba

CONSULTANT

AECOM
99 Commerce Drive
Winnipeg, Manitoba R3P 0Y7
204.477.5381 tel 204.284.2040 fax
www.aecom.com

REGISTRATION

PROVINCE OF MANITOBA
M. M. HOQUE
Member
30114
REGISTERED PROFESSIONAL ENGINEER
2018-12-14

APEGM
Certificate of Authorization
AECOM Canada Ltd.
No. 4671 Date: 2018.12.14

ISSUE/REVISION

I/R	DATE	DESCRIPTION
1	2018.12.14	ISSUED FOR CONSTRUCTION
0	2018.08.10	ISSUED FOR TENDER

PROJECT NUMBER

60247924

SHEET TITLE

KIRKCALDY LIFT STATION
STRUCTURAL
STANDARD DETAILS

SHEET NUMBER

S004

This drawing has been prepared for the use of AECOM's client and may not be used, reproduced or relied upon by third parties, except as agreed by AECOM and as stated, as required by law or for use by governmental reviewing agencies. AECOM accepts no responsibility, and denies any liability whatsoever, to any party that modifies this drawing without AECOM's express written consent. Do not scale this document. All measurements must be obtained from the stated dimensions.

Project Management Initials:Designer: KK/JT Checked: Checker Approved: Approver ANSI D 559mm x 864mm
Last Plotted: 12/18/2018 10:42:42 AM
Filename: P:\60247924\000-CAD\01-MODEL\STS\Design Files\60247924-MOD-00-S_V17_klippenstinek.rvt
Printed on ___% Post-Consumer Recycled Content Paper

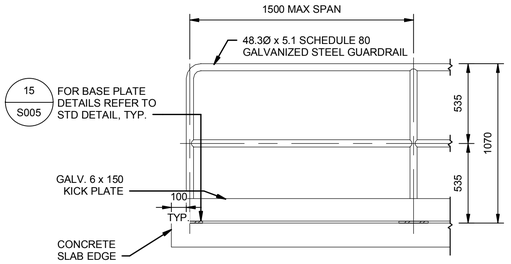

15 STD DETAIL - GALV. FIXED STEEL GUARDRAIL TO CONCRETE

SCALE: 1 : 20

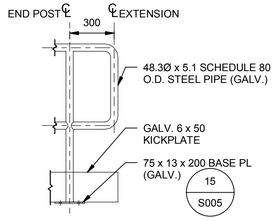

16 STD DETAIL - GUARDRAIL EXTENSION

SCALE: 1 : 20

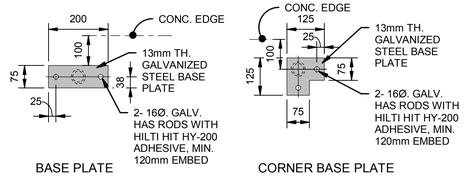

17 STD DETAIL - GALV. STEEL GUARDRAIL TO CONCRETE BASE PLATE

SCALE: 1 : 10

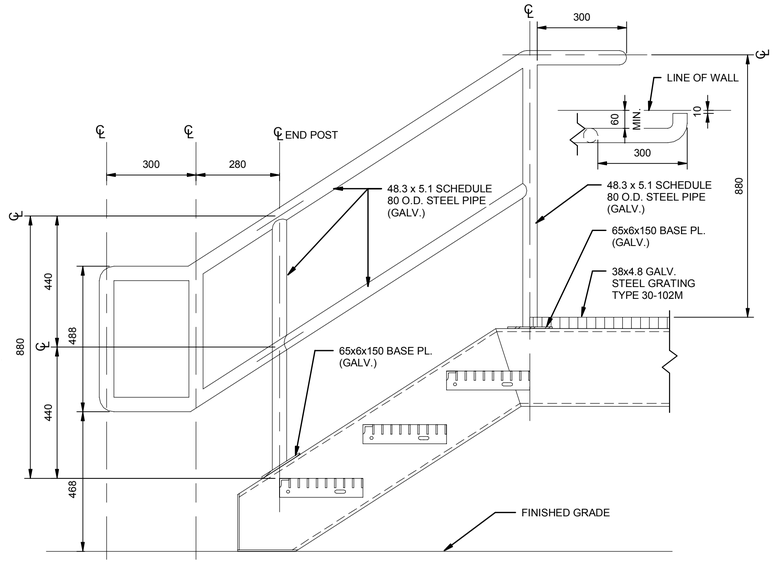

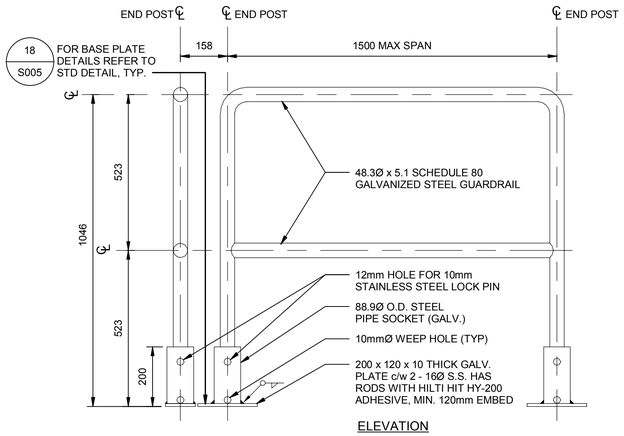

19 STD DETAIL - GALV. REMOVABLE GUARDRAIL

SCALE: 1 : 10

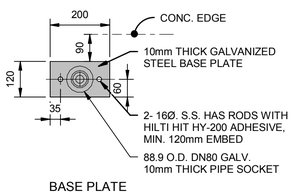

20 STD DETAIL - GALV. STEEL GUARDRAIL (REMOVABLE) TO CONCRETE BASE PLATE

SCALE: 1 : 10

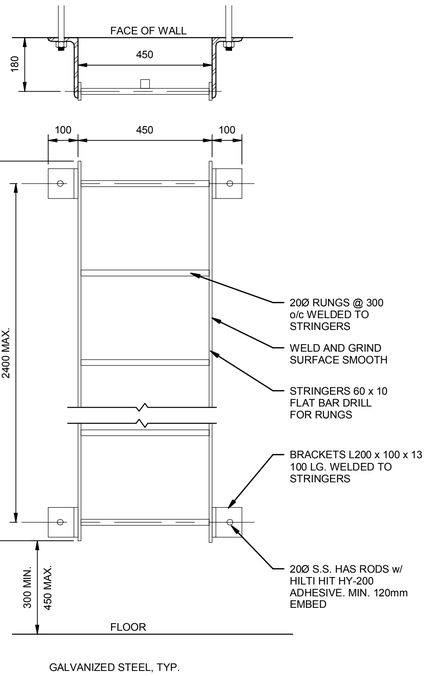

21 STD DETAIL GALV. STEEL LADDER

SCALE: 1 : 10

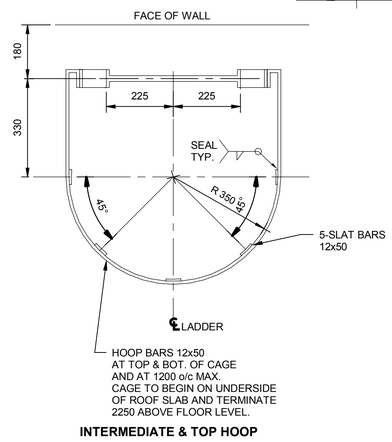

22 STD DETAIL - GALV. SAFETY CAGE

SCALE: 1 : 10

18 STD DETAIL - GALV. STEEL HANDRAIL TO STEEL STRINGER

SCALE: 1 : 10

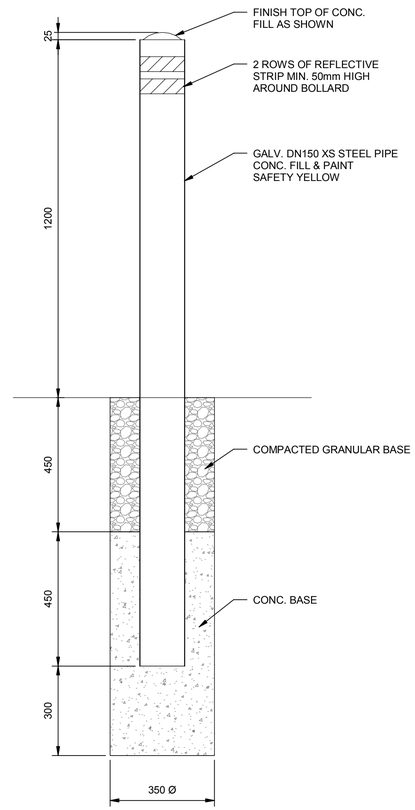

23 STD DETAIL- EXTERIOR BOLLARD

SCALE: 1 : 10

This drawing has been prepared for the use of AECOM's client and may not be used, reproduced or relied upon by third parties, except as agreed by AECOM and its client, as required by law or for use by governmental reviewing agencies. AECOM accepts no responsibility, and denies any liability whatsoever, to any party that modifies this drawing without AECOM's express written consent. Do not scale this document. All measurements must be obtained from the stated dimensions.

AECOM

PROJECT

City of Brandon
Kirkcaldy Lift Station

CLIENT

City of Brandon
Brandon, Manitoba

CONSULTANT

AECOM
99 Commerce Drive
Winnipeg, Manitoba R3P 0Y7
204.477.5381 tel 204.284.2040 fax
www.aecom.com

REGISTRATION

PROVINCE OF MANITOBA
M. M. HOQUE
Member
30114
REGISTERED PROFESSIONAL ENGINEER
2018-12-14

APEGM
Certificate of Authorization
AECOM Canada Ltd.
No. 4671 Date: 2018.12.14

ISSUE/REVISION

I/R	DATE	DESCRIPTION
1	2018.12.14	ISSUED FOR CONSTRUCTION
0	2018.08.10	ISSUED FOR TENDER

PROJECT NUMBER

60247924

SHEET TITLE

KIRKCALDY LIFT STATION
STRUCTURAL
STANDARD DETAILS

SHEET NUMBER

S005

Project Management Initials:Designer: Designer Checked: Checker Approved: Approver ANSI D 559mm x 864mm
Last Plotted: 12/18/2018 10:42:42 AM
Filename: P:\60247924\000-CAD\01-MODELS\SI\Design Files\60247924-MOD-00-S_V17_klippenstnek.rvt
Printed on ___% Post-Consumer Recycled Content Paper

Project Management Initials:Designer: KK/JT Checked: Checker Approved: Approver ANSI D 559mm x 864mm

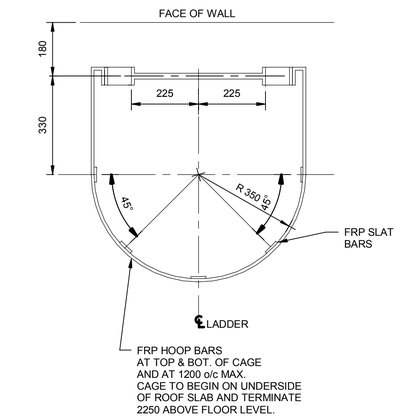

INTERMEDIATE & TOP HOOP

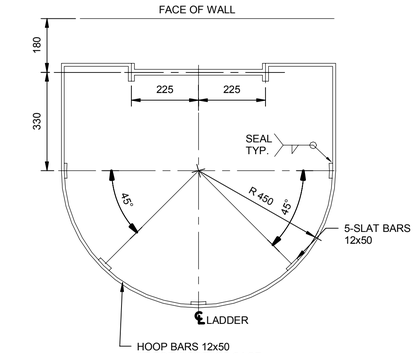

BOTTOM HOOP

24 STD DETAIL - FRP SAFETY CAGE

SCALE: 1 : 10

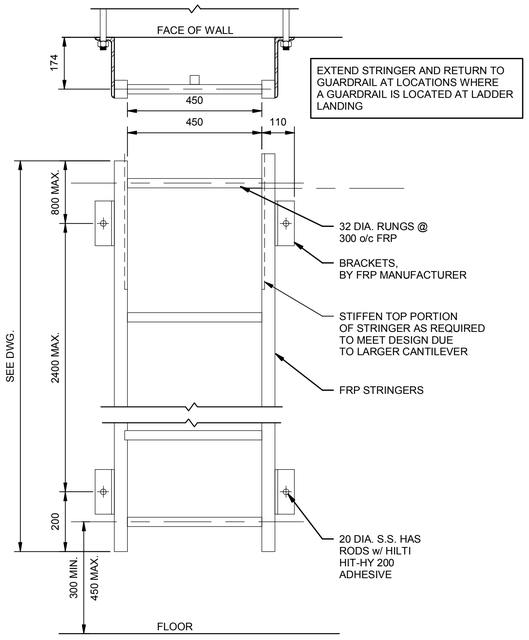

FRP, TYP.

25 STD DETAIL - FRP LADDER

SCALE: 1 : 10

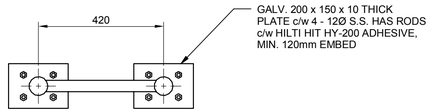

PLAN

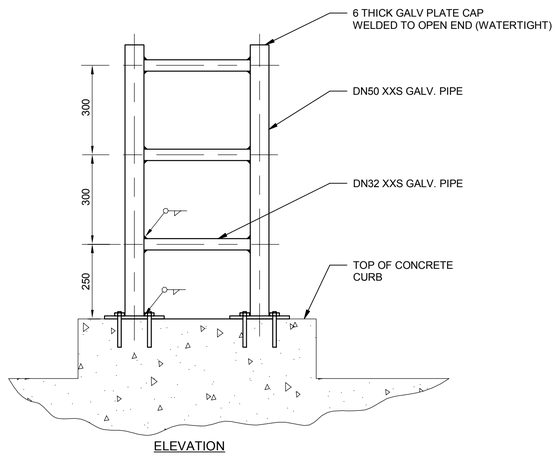

ELEVATION

27 STD DETAIL - GALV. HAND HOLD

SCALE: 1 : 10

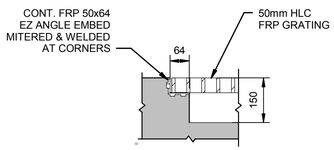

26 STD DETAIL - FRP GRATING

SCALE: 1 : 10

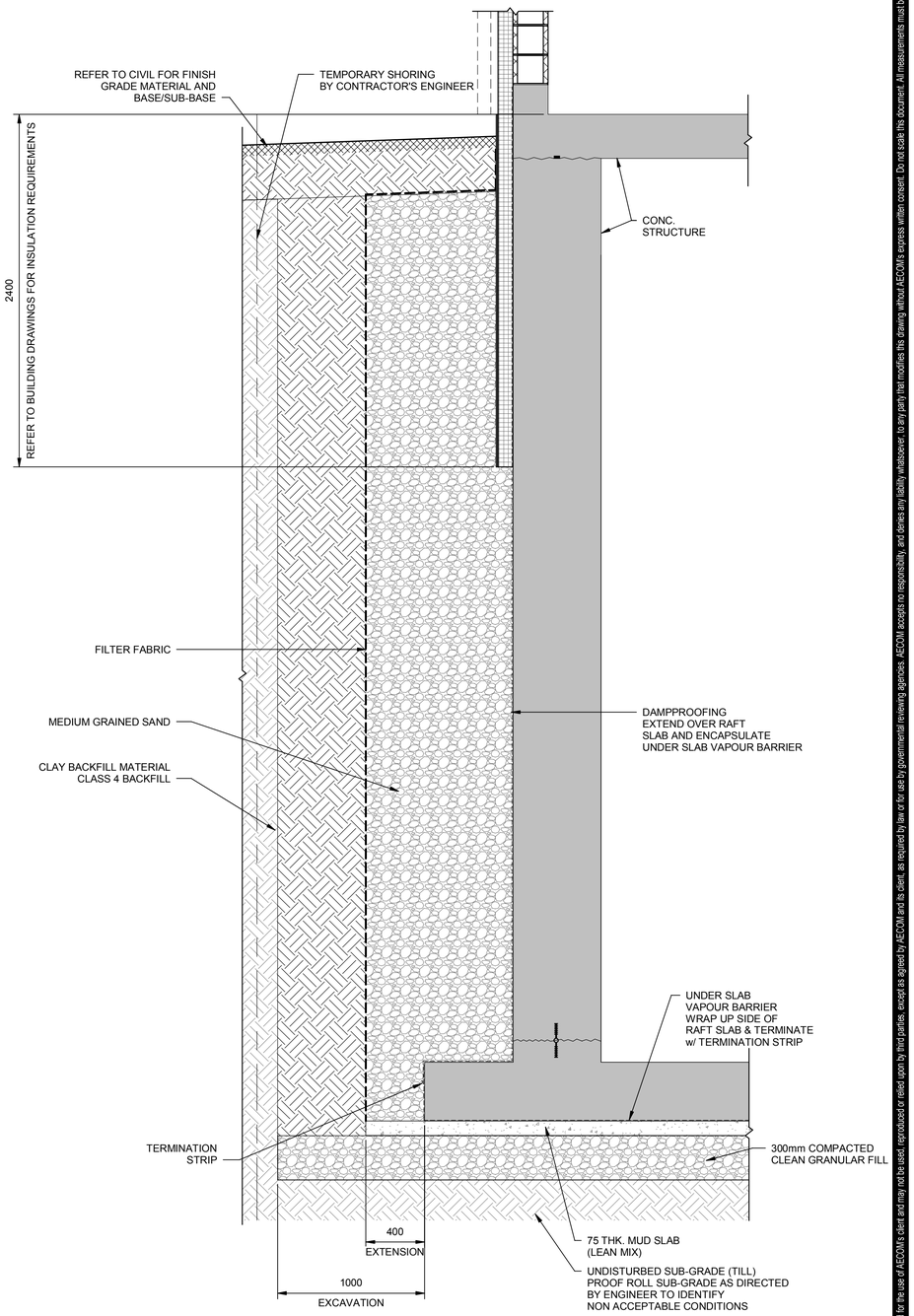

28 STD DETAIL - BACKFILL

SCALE: 1 : 20

This drawing has been prepared for the use of AECOM's client and may not be used, reproduced or relied upon by third parties, except as agreed by AECOM and its client, as required by law or by governmental reviewing agencies. AECOM accepts no responsibility, and denies any liability whatsoever, to any party that modifies this drawing without AECOM's express written consent. Do not scale this document. All measurements must be obtained from the stated dimensions.

AECOM

PROJECT

City of Brandon
Kirkcaldy Lift Station

CLIENT

City of Brandon
Brandon, Manitoba

CONSULTANT

AECOM
99 Commerce Drive
Winnipeg, Manitoba R3P 0Y7
204.477.5381 tel 204.284.2040 fax
www.aecom.com

REGISTRATION

PROVINCE OF MANITOBA
M. M. HOQUE
Member
30114
REGISTERED PROFESSIONAL ENGINEER
2018-12-14

APEGM
Certificate of Authorization
AECOM Canada Ltd.
No. 4671 Date: 2018.12.14

ISSUE/REVISION

1	2018.12.14	ISSUED FOR CONSTRUCTION
0	2018.08.10	ISSUED FOR TENDER
I/R	DATE	DESCRIPTION

PROJECT NUMBER

60247924

SHEET TITLE

KIRKCALDY LIFT STATION
STRUCTURAL
STANDARD DETAILS

SHEET NUMBER

S006

Last Plotted: 12/18/2018 10:42:44 AM
Filename: P:\60247924\000-CAD\01-MODELS\S\Design Files\60247924-MOD-00-S_V17_klippenstnek.rvt
Printed on ___% Post-Consumer Recycled Content Paper

Project Management Initials:Designer: Designer Checked: Checker Approved: Approver ANSI D 559mm x 864mm

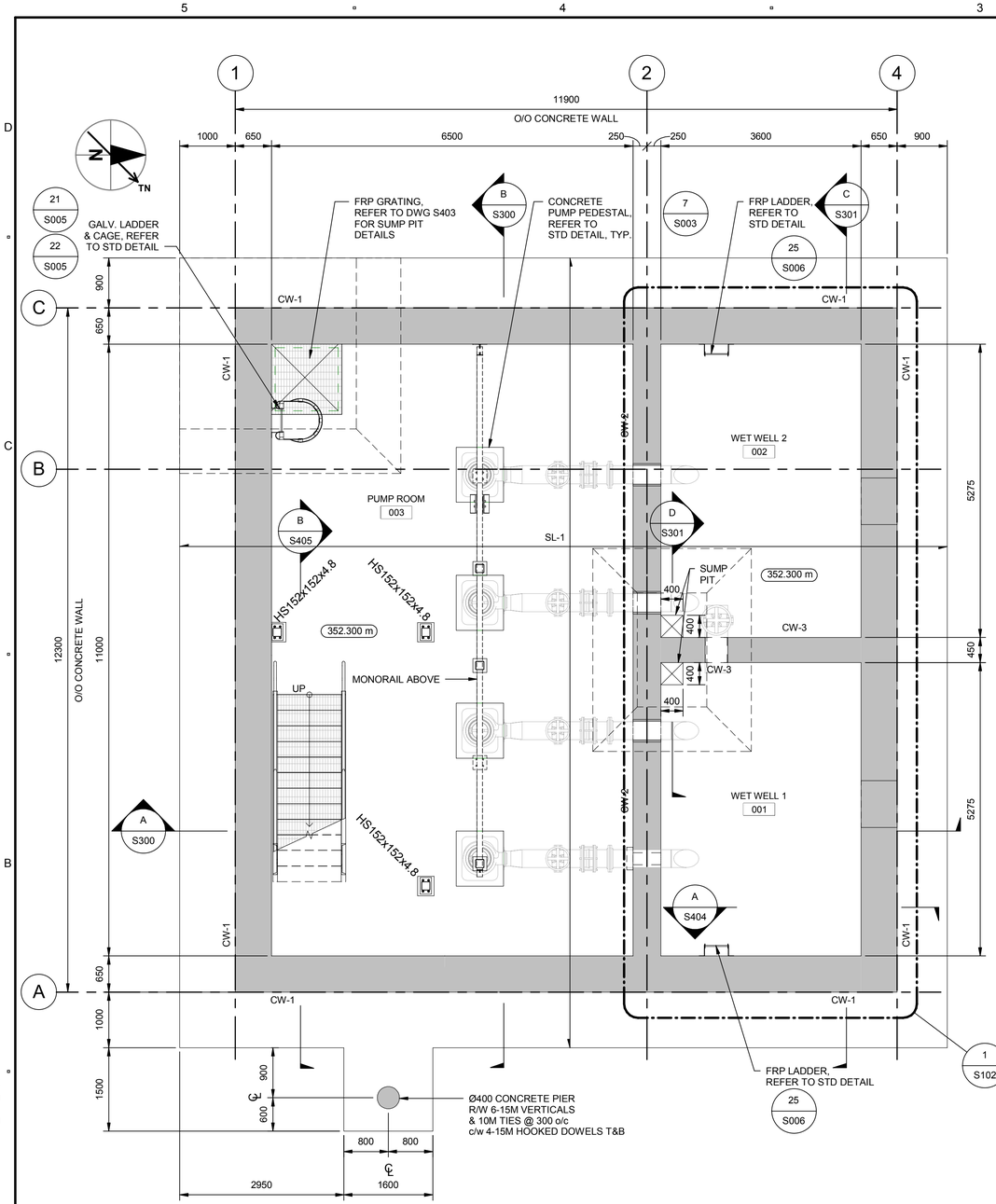

1 | LOWER LEVEL PLAN

B300 | SCALE: 1 : 50

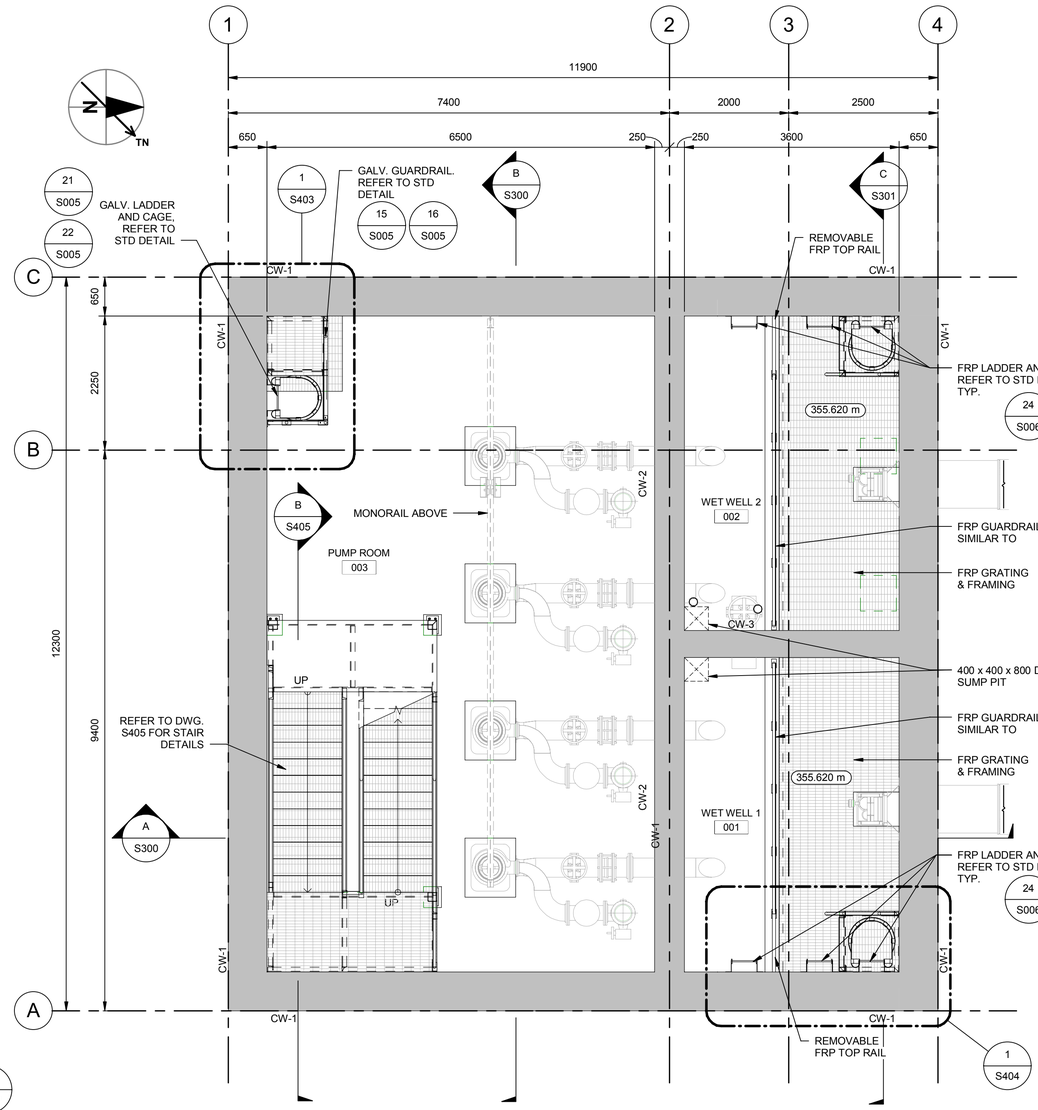

2 | LOW PLATFORM PLAN

B300 | SCALE: 1 : 50

LOWER LEVEL DESIGN LOADS (UNFACTORED)		
DEAD LOADS	STRUCTURE SELF WEIGHT	
LIVE LOADS	HWL EL. 361.000m	8.7m LIQUID DEPTH
EARTH LOADS	LATERAL EARTH PRESSURE	(6+15H) kPa H = DEPTH OF SOIL
	SOIL UNIT WEIGHT	21.0 kN/m³

This drawing has been prepared for the use of AECOM's client and may not be used, reproduced or relied upon by third parties, except as agreed by AECOM and its client, as required by law or for use by governmental reviewing agencies. AECOM accepts no responsibility, and denies any liability whatsoever to any party that modifies this drawing without AECOM's express written consent. Do not scale this document. All measurements must be obtained from the stated dimensions.

AECOM

PROJECT

City of Brandon
Kirkcaldy Lift Station

CLIENT

City of Brandon
Brandon, Manitoba

CONSULTANT

AECOM
99 Commerce Drive
Winnipeg, Manitoba R3P 0Y7
204.477.5381 tel 204.284.2040 fax
www.aecom.com

REGISTRATION

PROVINCE OF MANITOBA
M. Hoque
M. M. HOQUE
Member
30114
REGISTERED PROFESSIONAL ENGINEER
2018-12-14

APEGM
Certificate of Authorization
AECOM Canada Ltd.
No. 4671 Date: 2018.12.14

ISSUE/REVISION

I/R	DATE	DESCRIPTION
1	2018.12.14	ISSUED FOR CONSTRUCTION
0	2018.08.10	ISSUED FOR TENDER

PROJECT NUMBER

60247924

SHEET TITLE

KIRKCALDY LIFT STATION
STRUCTURAL
LOWER LEVEL PLAN
LOW PLATFORM PLAN

SHEET NUMBER

S100

Last Plotted: 12/18/2018 10:42:47 AM
Filename: P:\60247924\000-CAD\01-MODELS\Design Files\60247924-MOD-00-S_V17_klippenstinek.rvt

Printed on ___% Post-Consumer Recycled Content Paper

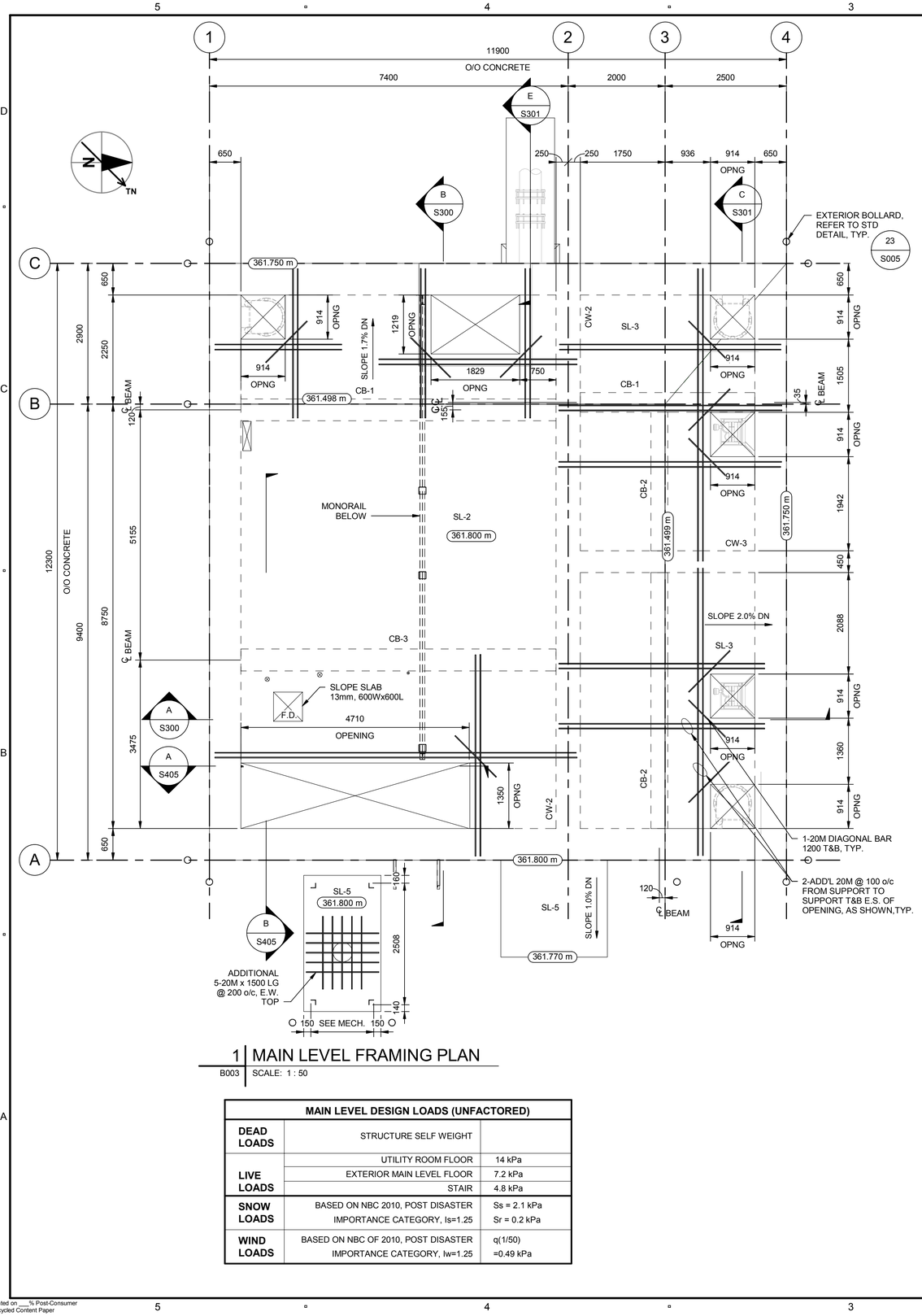

1 | MAIN LEVEL FRAMING PLAN

B003 SCALE: 1 : 50

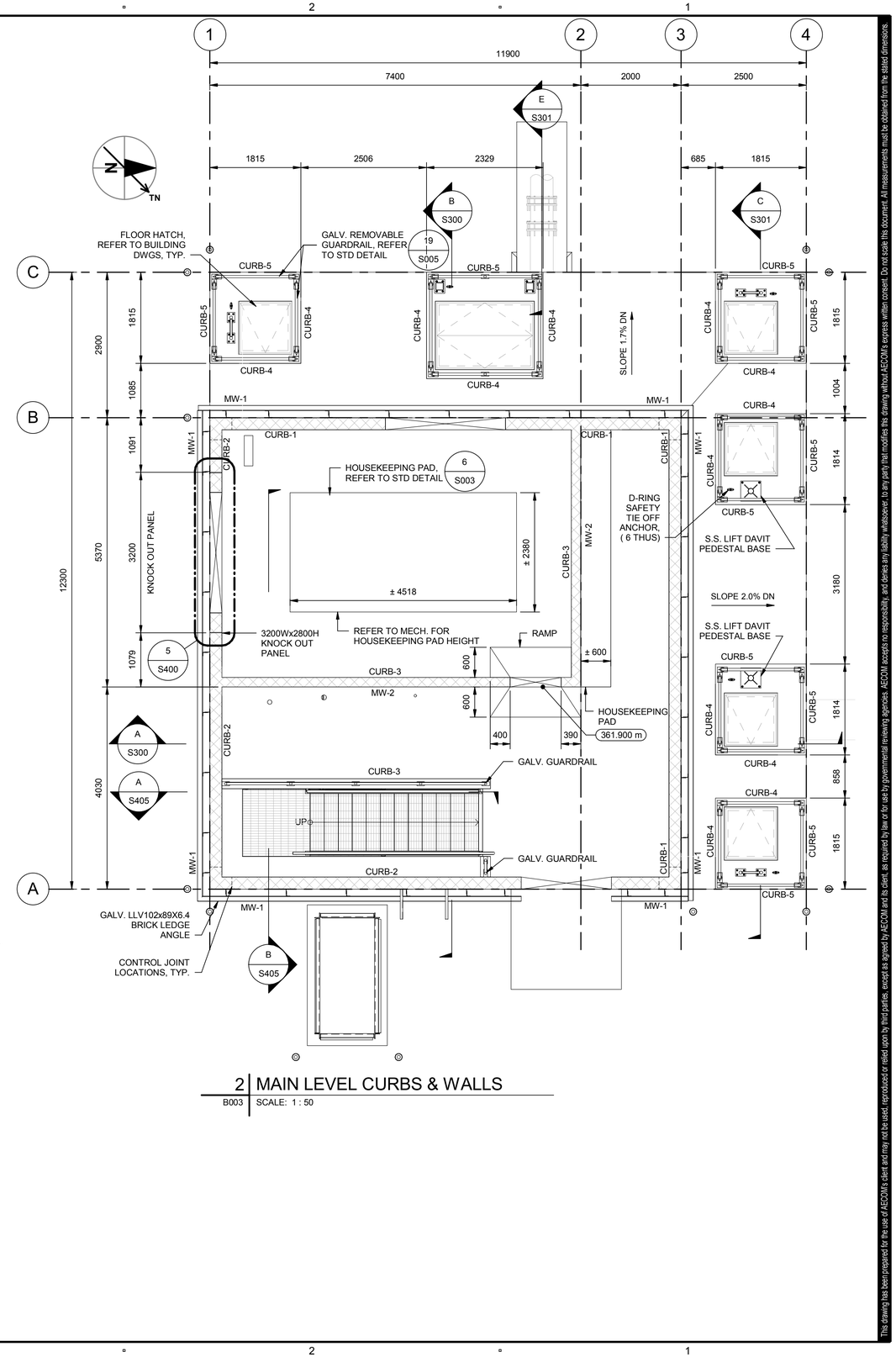

2 | MAIN LEVEL CURBS & WALLS

B003 SCALE: 1 : 50

MAIN LEVEL DESIGN LOADS (UNFACTORED)		
DEAD LOADS	STRUCTURE SELF WEIGHT	
LIVE LOADS	UTILITY ROOM FLOOR	14 kPa
	EXTERIOR MAIN LEVEL FLOOR	7.2 kPa
	STAIR	4.8 kPa
SNOW LOADS	BASED ON NBC 2010, POST DISASTER	Ss = 2.1 kPa
	IMPORTANCE CATEGORY, Is=1.25	Sr = 0.2 kPa
WIND LOADS	BASED ON NBC OF 2010, POST DISASTER	q(1/50)
	IMPORTANCE CATEGORY, Iw=1.25	=0.49 kPa

This drawing has been prepared for the use of AECOM's client and may not be used, reproduced or relied upon by third parties, except as agreed by AECOM and its client, as required by law or for use by governmental reviewing agencies. AECOM accepts no responsibility, and denies any liability whatsoever, to any party that modifies this drawing without AECOM's express written consent. Do not scale this document. All measurements must be obtained from the stated dimensions.

AECOM

PROJECT

City of Brandon
Kirkcaldy Lift Station

CLIENT

City of Brandon
Brandon, Manitoba

CONSULTANT

AECOM
99 Commerce Drive
Winnipeg, Manitoba R3P 0Y7
204.477.5381 tel 204.284.2040 fax
www.aecom.com

REGISTRATION

PROVINCE OF MANITOBA
M. M. HOQUE
Member
30114
REGISTERED PROFESSIONAL ENGINEER
2018-12-14

PEGM
Certificate of Authorization
AECOM Canada Ltd.
No. 4671 Date: 2018.12.14

ISSUE/REVISION

I/R	DATE	DESCRIPTION
1	2018.08.15	ADDENDUM
0	2018.08.10	ISSUED FOR TENDER

PROJECT NUMBER

60247924

SHEET TITLE

KIRKCALDY LIFT STATION
STRUCTURAL
MAIN LEVEL FRAMING PLAN
CURBS & WALLS

SHEET NUMBER

S101

Project Management Initials:Designer: Designer Checked: Checker Approved: Approver ANSI D 559mm x 864mm
Last Plotted: 12/18/2018 10:42:50 AM
Filename: P:\60247924\000-CAD\01-MODELS\S\Design Files\60247924-MOD-00-S_V17_klippenstinek.rvt

Printed on ___% Post-Consumer Recycled Content Paper

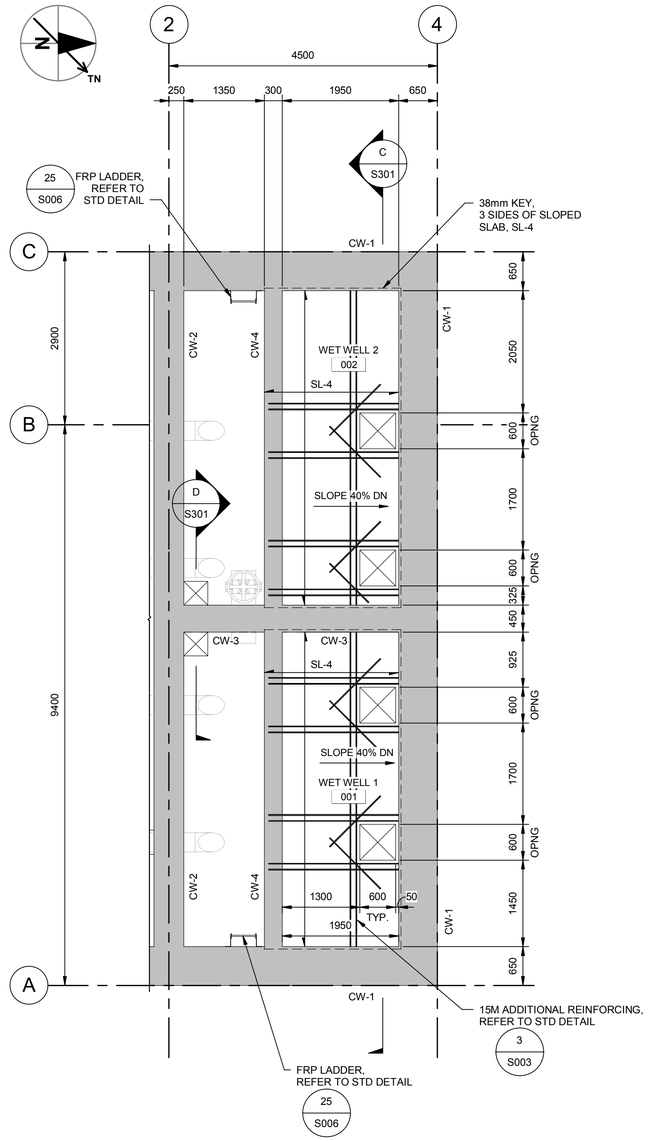

1 SLOPED SL-4 FRAMING PLAN

S100 | SCALE: 1 : 50

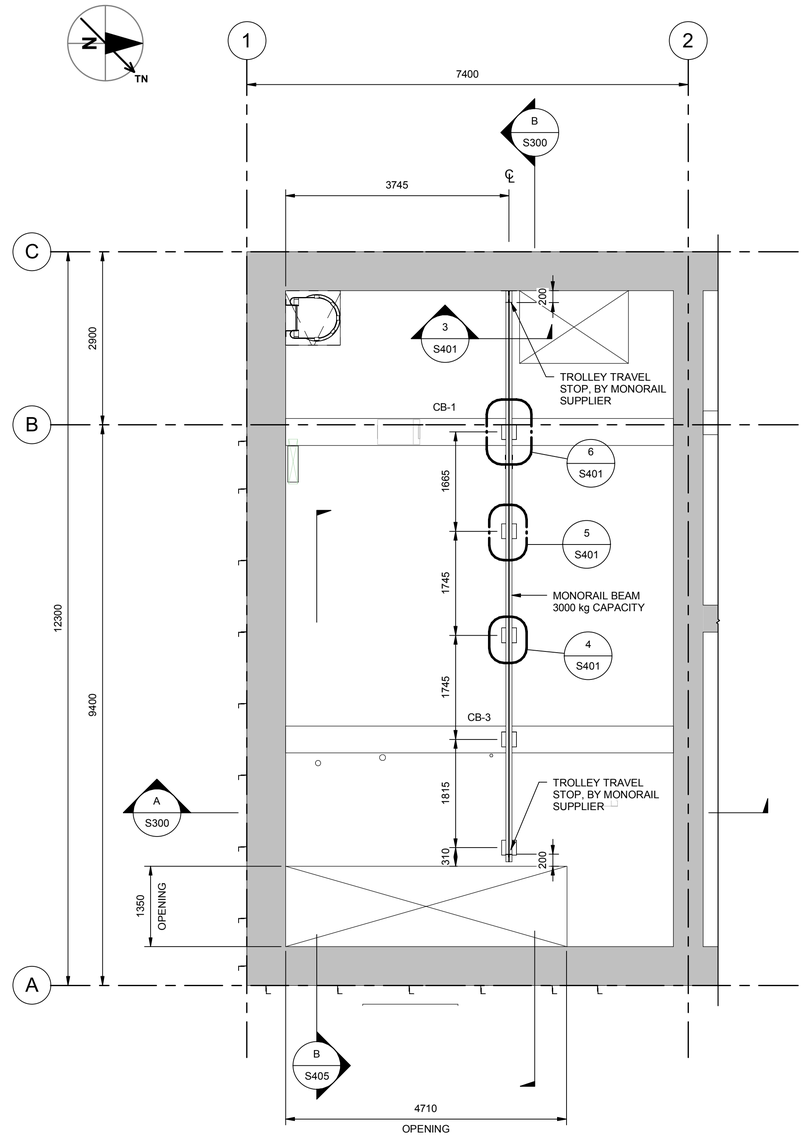

2 MONORAIL FRAMING PLAN

B300 | SCALE: 1 : 50

This drawing has been prepared for the use of AECOM's client and may not be used, reproduced or relied upon by third parties, except as agreed by AECOM and its client, as required by law or as required by governmental reviewing agencies. AECOM accepts no responsibility, and denies any liability whatsoever, to any party that modifies this drawing without AECOM's express written consent. Do not scale this document. All measurements must be obtained from the stated dimensions.

AECOM

PROJECT

City of Brandon
Kirkcaldy Lift Station

CLIENT

City of Brandon
Brandon, Manitoba

City of BRANDON

CONSULTANT

AECOM
99 Commerce Drive
Winnipeg, Manitoba R3P 0Y7
204.477.5381 tel 204.284.2040 fax
www.aecom.com

REGISTRATION

PROVINCE OF MANITOBA
M. M. HOQUE
Member
30114
REGISTERED PROFESSIONAL ENGINEER
2018-12-14

APEGM
Certificate of Authorization
AECOM Canada Ltd.
No. 4671 Date: 2018.12.14

ISSUE/REVISION

1	2018.12.14	ISSUED FOR CONSTRUCTION
0	2018.08.10	ISSUED FOR TENDER
I/R	DATE	DESCRIPTION

PROJECT NUMBER

60247924

SHEET TITLE

KIRKCALDY LIFT STATION
STRUCTURAL
PARTIAL FRAMING PLANS

SHEET NUMBER

S102

Project Management Initials:Designer: Designer Checked: Checker Approved: Approver ANSI D 559mm x 864mm
Last Plotted: 12/18/2018 10:42:50 AM
Filename: P:\60247924\000-CAD\01-MODELS\Design Files\60247924-MOD-00-S_V17_klippenstinek.rvt
Printed on ___% Post-Consumer Recycled Content Paper

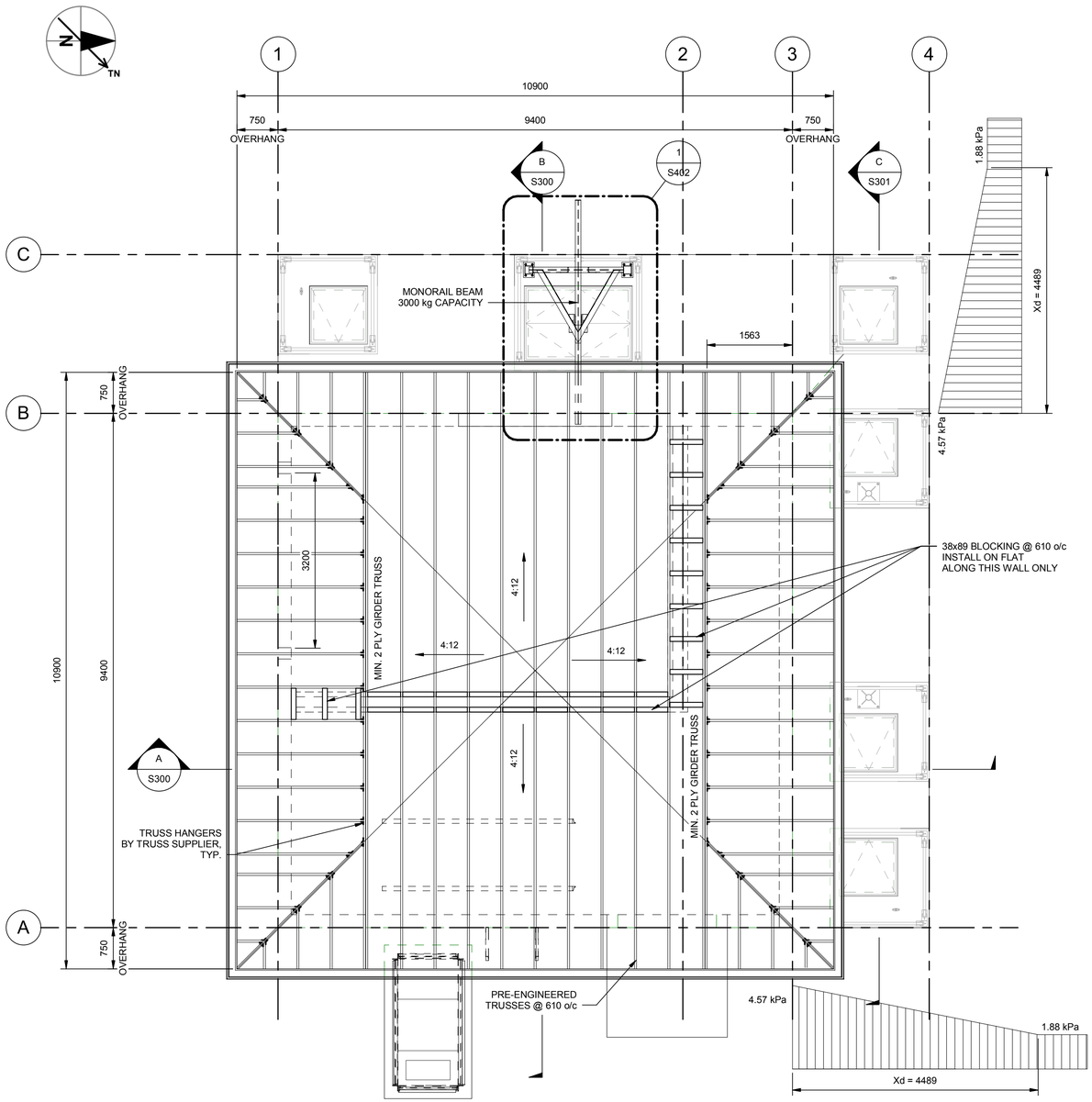

2 ROOF FRAMING PLAN

B003 SCALE: 1 : 50

DISTRIBUTION OF SNOW LOAD		
4/12 ROOF	CASE 1 ULS = 1.88 kPa SLS = 1.69 kPa	CASE 2 ULS = 2.17 kPa SLS = 1.95 kPa

ROOF DESIGN LOADS (UNFACTORED)		
DEAD LOADS	ROOF LOAD	1.0 kPa
	ROOF COLLATERAL LOADS (ELECTRICAL - MECHANICAL - PROCESS)	1.0 kPa
SNOW LOADS	BASED ON NBC OF CANADA 2010, NORMAL	Ss = 2.1 kPa
	IMPORTANCE CATEGORY, Is=1.0 ULS, Is=0.9 SLS	Sr = 0.2 kPa
WIND LOADS	BASED ON NBC OF CANADA 2010, NORMAL	q(1/50)=0.49 kPa
	IMPORTANCE CATEGORY, Iw=1.00 ULS, Iw=0.75 SLS	Ce = 0.9
	EXTERNAL WIND PRESURE LOADS	
	LOAD CASE A (PERPENDICULAR TO RIDGE) CpCg (GL'S '1' & '3') = 1.74	p=0.77 kPa (ULS) p=0.58 kPa (SLS)
	CpCb (GL'S 'A' & 'B') = N/A	
	LOAD CASE B (PARALLEL TO RIDGE) CpCg (GL'S '1' & '3') = 1.70	p=0.74 kPa (ULS) p=0.56 kPa (SLS)
	CpCg (GL'S 'A' & 'B') = 1.5	p=0.68 kPa (ULS) p=0.51 kPa (SLS)
	INTERNAL WIND PRESURE LOADS	
	CpiCgi = -1.4 TO 1.4	p=-0.62 TO 0.62 kPa (ULS) p=-0.46 TO 0.46 kPa (SLS)

SUPERIMPOSED LINE LOADS ARE SHOWN ON DRAWING

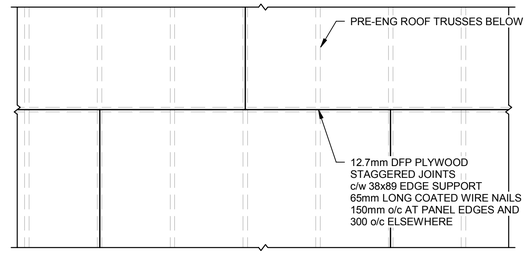

3 ROOF PANEL DIAGRAM

SCALE: 1 : 25

AECOM

PROJECT

City of Brandon
Kirkcaldy Lift Station

CLIENT

City of Brandon
Brandon, Manitoba

CONSULTANT

AECOM
99 Commerce Drive
Winnipeg, Manitoba R3P 0Y7
204.477.5381 tel 204.284.2040 fax
www.aecom.com

REGISTRATION

PROVINCE OF MANITOBA
M. M. HOQUE
Member
30114
REGISTERED PROFESSIONAL ENGINEER
2018-12-14

APEGM
Certificate of Authorization
AECOM Canada Ltd.
No. 4671 Date: 2018.12.14

ISSUE/REVISION

I/R	DATE	DESCRIPTION
2	2018.12.14	ISSUED FOR CONSTRUCTION
1	2018.08.15	ADDENDUM
0	2018.08.10	ISSUED FOR TENDER

PROJECT NUMBER

60247924

SHEET TITLE

KIRKCALDY LIFT STATION
STRUCTURAL
ROOF FRAMING PLAN

SHEET NUMBER

S103

This drawing has been prepared for the use of AECOM's client and may not be used, reproduced or relied upon by third parties, except as agreed by AECOM and its client, as required by law or for use by governmental reviewing agencies. AECOM accepts no responsibility, and denies any liability whatsoever, to any party that modifies this drawing without AECOM's express written consent. Do not scale this document. All measurements must be obtained from the stated dimensions.

Project Management Initials:Designer: Designer Checked: Checker Approved: Approver ANSI D 559mm x 864mm
Last Plotted: 12/18/2018 10:42:52 AM
Filename: P:\60247924\000-CAD\01-MODELS\S\Design Files\60247924-MOD-00-S_V17_klippenstnek.rvt

Printed on ___% Post-Consumer Recycled Content Paper

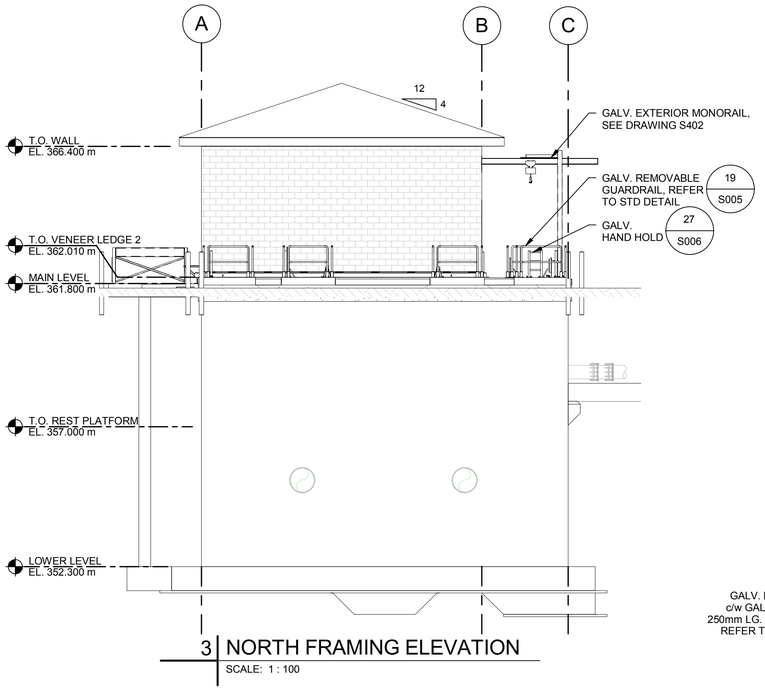

3 NORTH FRAMING ELEVATION

SCALE: 1 : 100

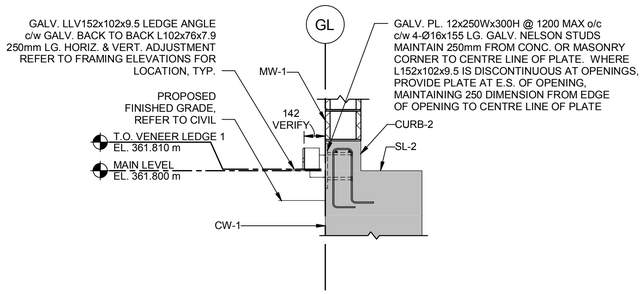

5 TYPICAL BRICK LEDGE DETAIL

SCALE: 1 : 20

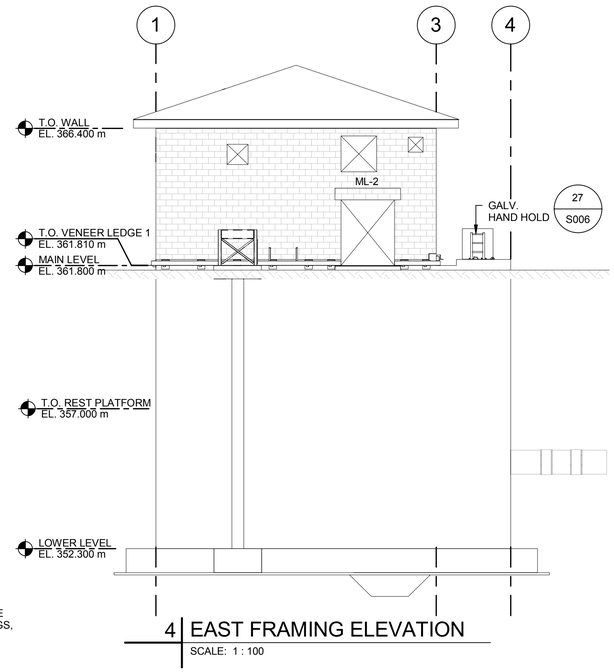

4 EAST FRAMING ELEVATION

SCALE: 1 : 100

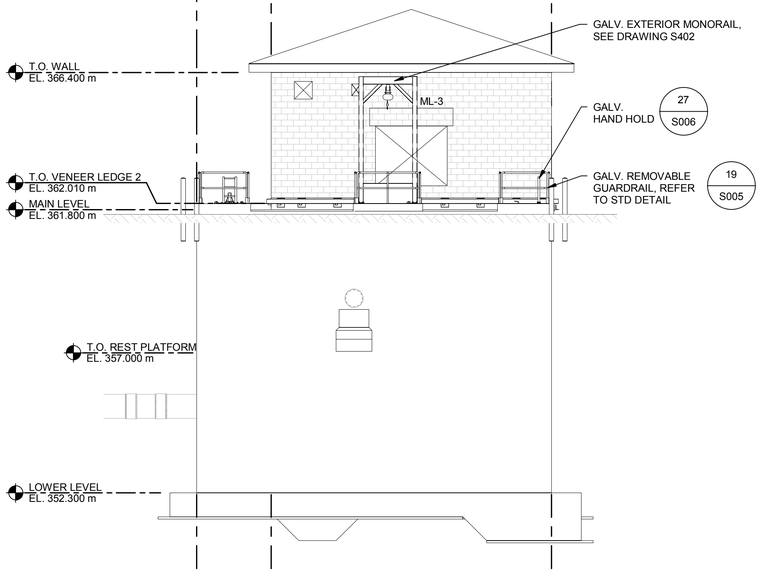

1 SOUTH FRAMING ELEVATION

SCALE: 1 : 100

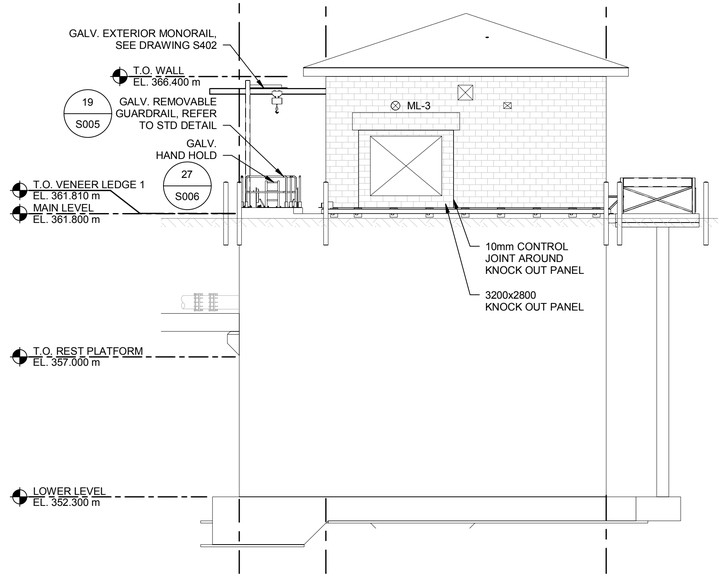

2 WEST FRAMING ELEVATION

SCALE: 1 : 100

This drawing has been prepared for the use of AECOM's client and may not be used, reproduced or relied upon by third parties, except as agreed by AECOM and its client, as required by law or for use by governmental reviewing agencies. AECOM accepts no responsibility, and denies any liability whatsoever, to any party that modifies this drawing without AECOM's express written consent. Do not scale this document. All measurements must be obtained from the stated dimensions.

Project Management Initials:Designer: Designer Checked: Checker Approved: Approver ANSI D 559mm x 864mm

Last Plotted: 12/18/2018 10:42:56 AM
Filename: P:\60247924\000-CAD\01-MODELS\SDesign Files\60247924-MOD-00-S_V17_klippenstinek.rvt

Printed on ___% Post-Consumer Recycled Content Paper

AECOM

PROJECT

City of Brandon
Kirkcaldy Lift Station

CLIENT

City of Brandon
Brandon, Manitoba

City of BRANDON

CONSULTANT

AECOM
99 Commerce Drive
Winnipeg, Manitoba R3P 0Y7
204.477.5381 tel 204.284.2040 fax
www.aecom.com

REGISTRATION

PROVINCE OF MANITOBA
M. M. HOQUE
Member 30114
REGISTERED PROFESSIONAL ENGINEER
2018-12-14

APEGM
Certificate of Authorization
AECOM Canada Ltd.
No. 4671 Date: 2018.12.14

ISSUE/REVISION

2	2018.12.14	ISSUED FOR CONSTRUCTION
1	2018.08.15	ADDENDUM
0	2018.08.10	ISSUED FOR TENDER
I/R	DATE	DESCRIPTION

PROJECT NUMBER

60247924

SHEET TITLE

KIRKCALDY LIFT STATION
STRUCTURAL
FRAMING ELEVATIONS

SHEET NUMBER

S200

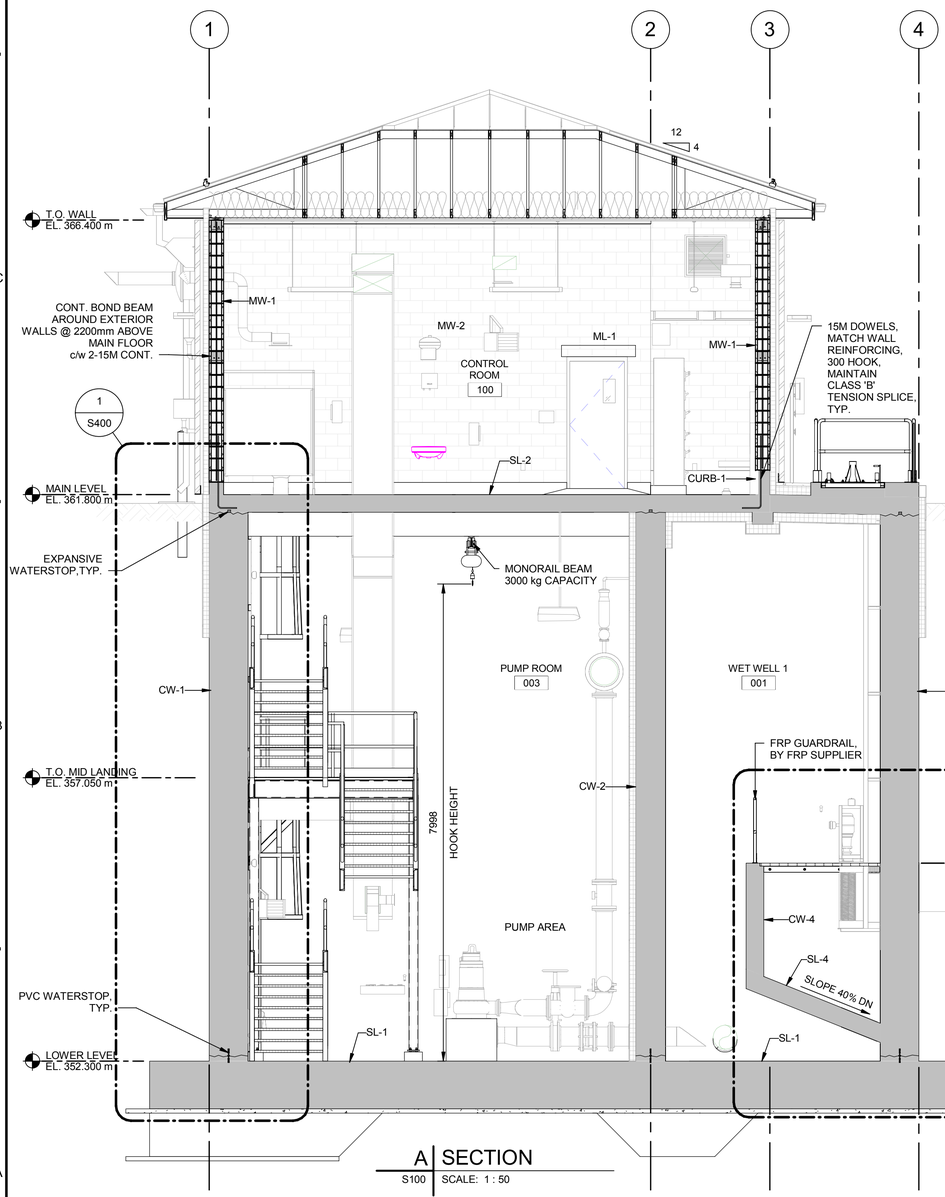

A | SECTION
S100 | SCALE: 1 : 50

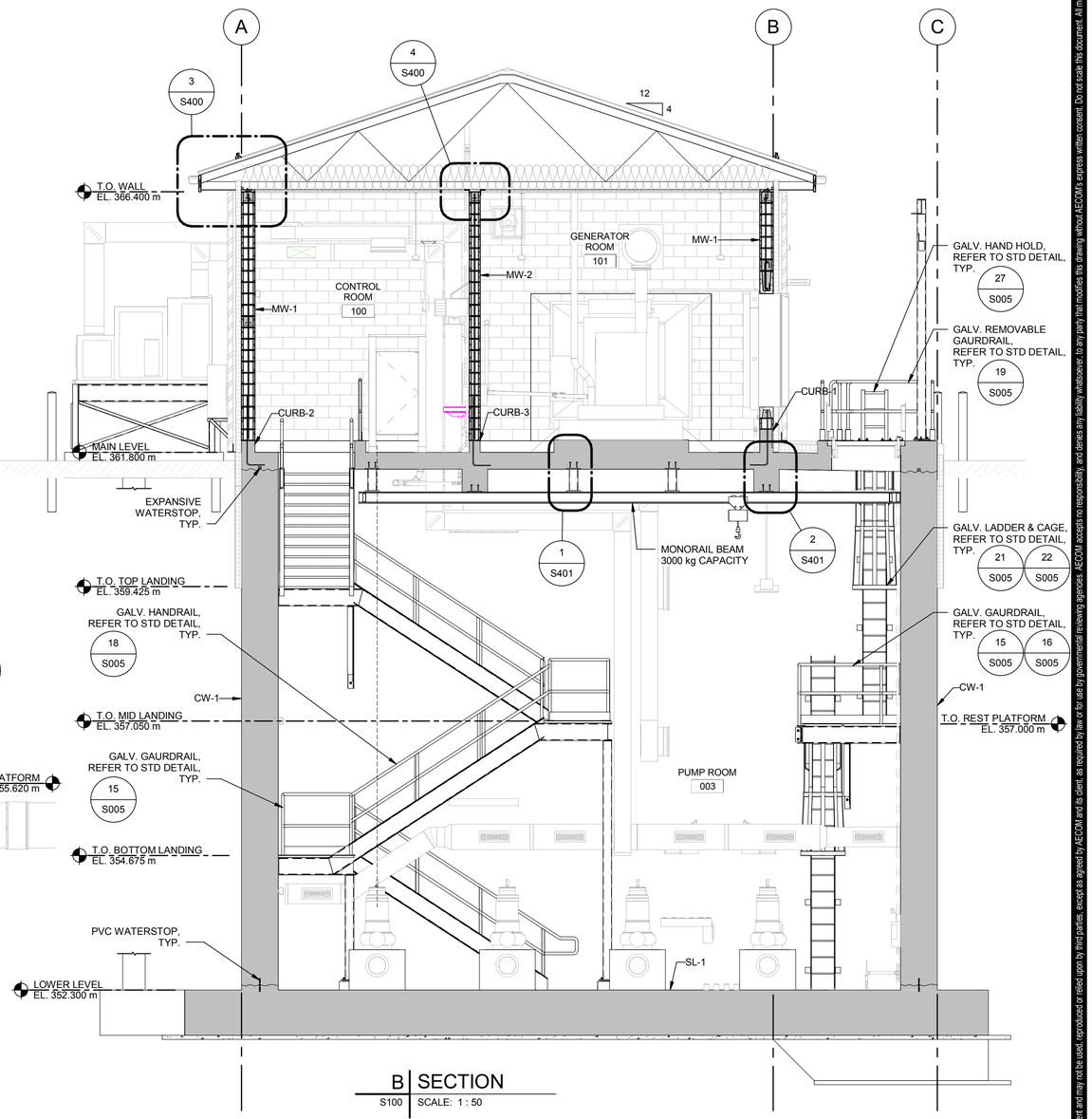

B | SECTION
S100 | SCALE: 1 : 50

NOTE:
REFER TO STD DETAIL 27/S006 FOR BACKFILL MATERIALS AND DETAILS

This drawing has been prepared for the use of AECOM's client and may not be used, reproduced or relied upon by third parties, except as agreed by AECOM and its client, as required by law or by use by governmental reviewing agencies. AECOM accepts no responsibility, and denies any liability whatsoever to any party that modifies this drawing without AECOM's express written consent. Do not scale this document. All measurements must be obtained from the stated dimensions.

AECOM

PROJECT

City of Brandon
Kirkcaldy Lift Station

CLIENT

City of Brandon
Brandon, Manitoba

CONSULTANT

AECOM
99 Commerce Drive
Winnipeg, Manitoba R3P 0Y7
204.477.5381 tel 204.284.2040 fax
www.aecom.com

REGISTRATION

PROVINCE OF MANITOBA
M. M. HOQUE
Member
30114
REGISTERED PROFESSIONAL ENGINEER
2018-12-14

APEGM
Certificate of Authorization
AECOM Canada Ltd.
No. 4671 Date: 2018.12.14

ISSUE/REVISION

2	2018.12.14	ISSUED FOR CONSTRUCTION
1	2018.08.15	ADDENDUM
0	2018.08.10	ISSUED FOR TENDER
I/R	DATE	DESCRIPTION

PROJECT NUMBER

60247924

SHEET TITLE

KIRKCALDY LIFT STATION
STRUCTURAL
SECTIONS

SHEET NUMBER

S300

Project Management Initials:Designer: Designer Checked: Checker Approved: Approver ANSI D 559mm x 864mm
Last Plotted: 12/18/2018 10:43:02 AM
Filename: P:\60247924\000-CAD\01-MODELS\S\Design Files\60247924-MOD-00-S_V17_klippenstinek.rvt
Printed on ___% Post-Consumer Recycled Content Paper

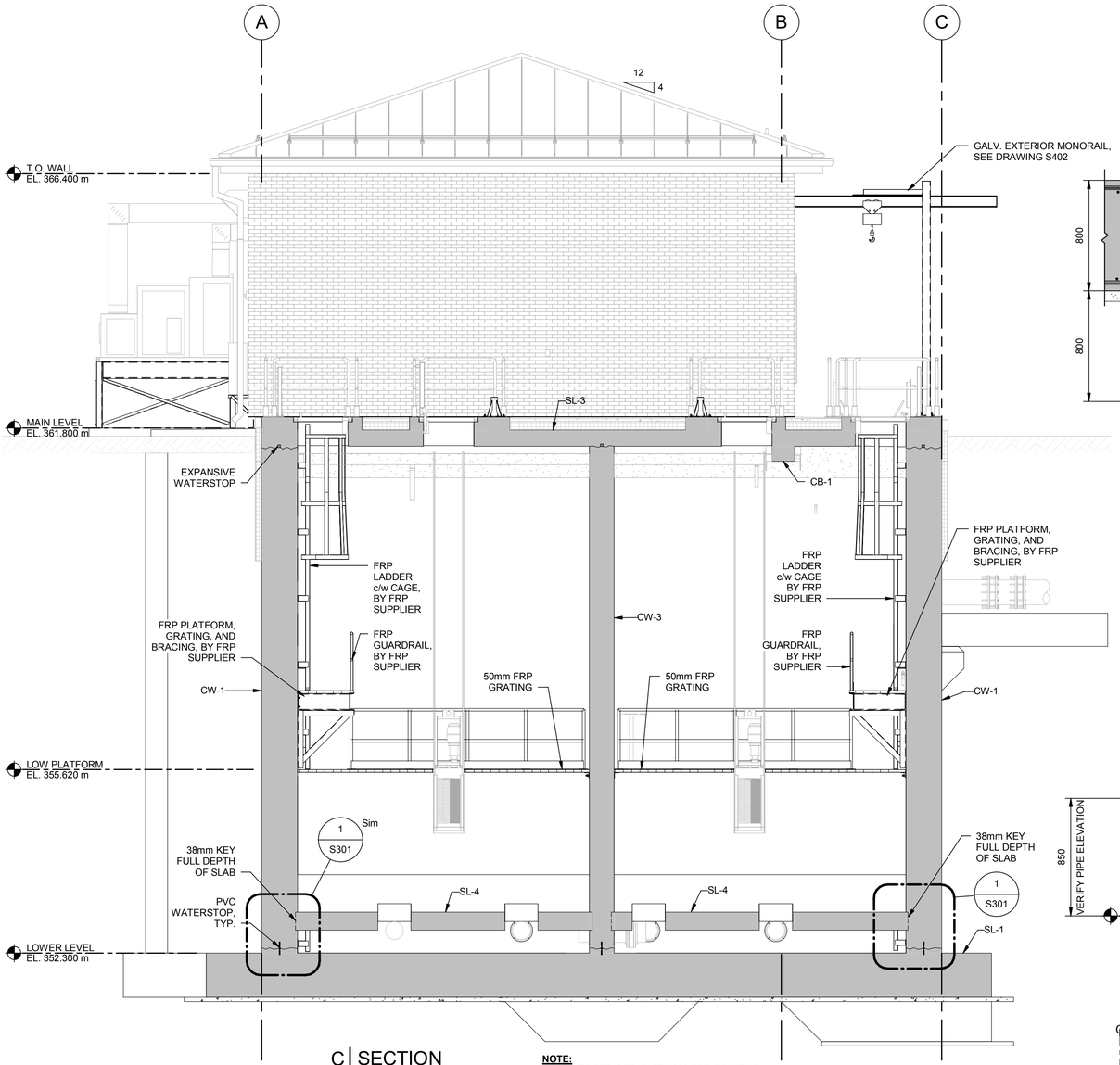

C | SECTION
S100 | SCALE: 1 : 50

NOTE:
REFER TO STD DETAIL 27/S006 FOR BACKFILL MATERIALS AND DETAILS

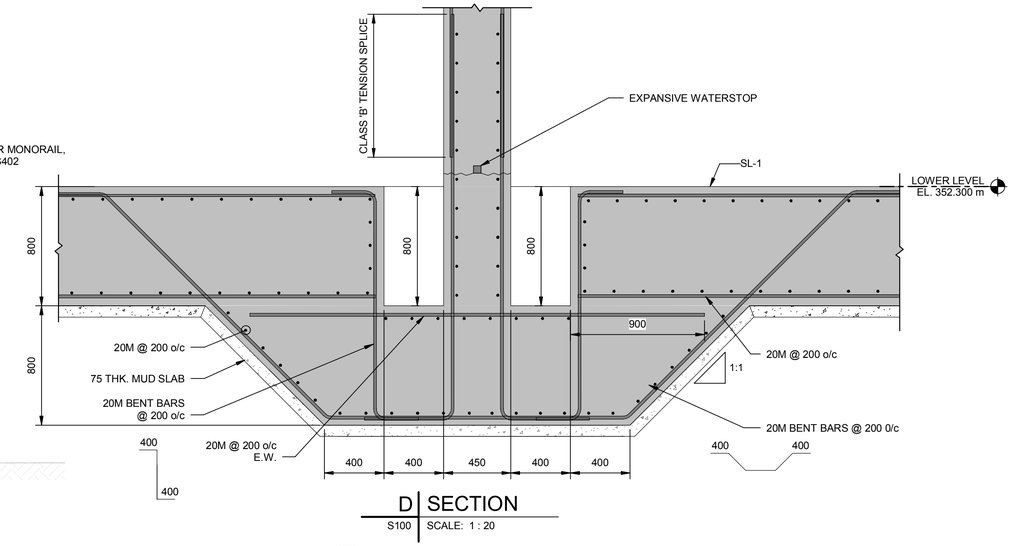

D | SECTION
S100 | SCALE: 1 : 20

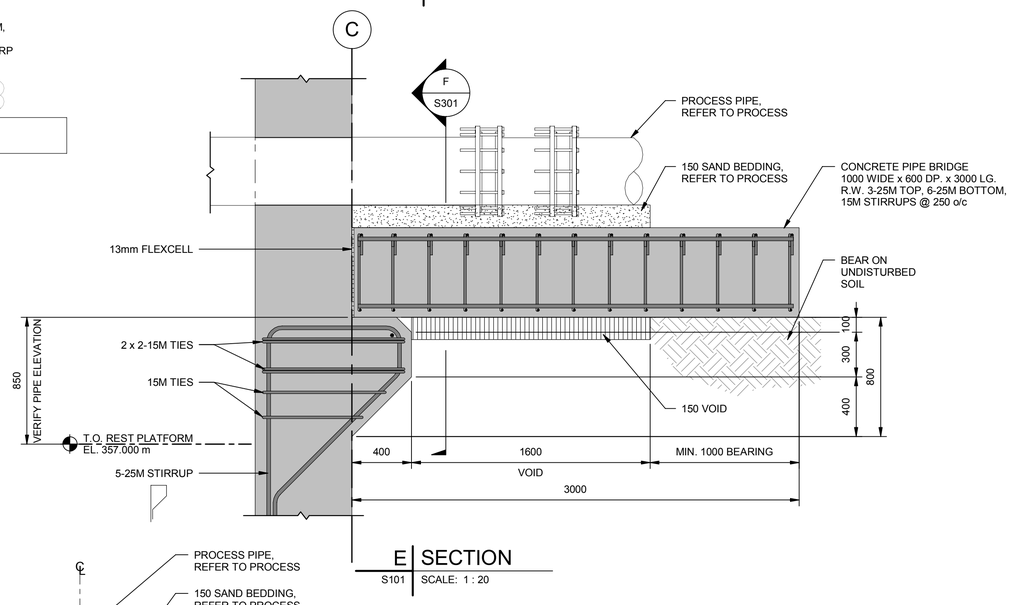

E | SECTION
S101 | SCALE: 1 : 20

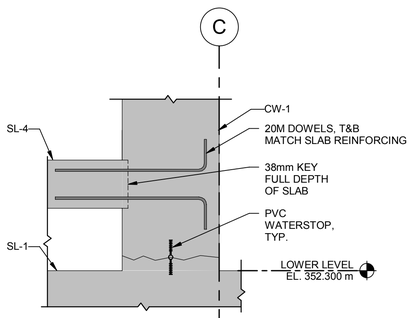

1 | DETAIL
S301 | SCALE: 1 : 20

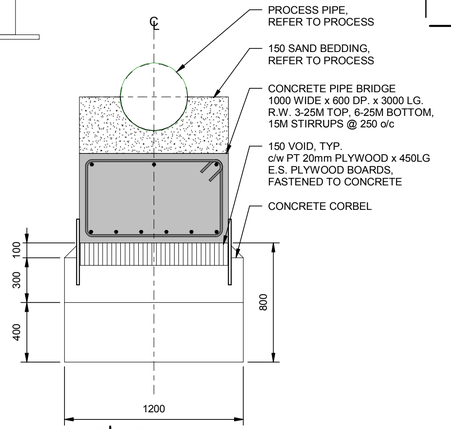

F | SECTION
S301 | SCALE: 1 : 20

This drawing has been prepared for the use of AECOM's client and may not be used, reproduced or relied upon by third parties, except as agreed by AECOM and its client, as required by law or for use by governmental reviewing agencies. AECOM accepts no responsibility, and denies any liability whatsoever, to any party that modifies this drawing without AECOM's express written consent. Do not scale this document. All measurements must be obtained from the stated dimensions.

AECOM

PROJECT

City of Brandon
Kirkcaldy Lift Station

CLIENT

City of Brandon
Brandon, Manitoba

CONSULTANT

AECOM
99 Commerce Drive
Winnipeg, Manitoba R3P 0Y7
204.477.5381 tel 204.284.2040 fax
www.aecom.com

REGISTRATION

PROVINCE OF MANITOBA
M. M. HOQUE
Member
30114
REGISTERED PROFESSIONAL ENGINEER
2018-12-14

APEGM
Certificate of Authorization
AECOM Canada Ltd.
No. 4671 Date: 2018.12.14

ISSUE/REVISION

1	2018.12.14	ISSUED FOR CONSTRUCTION
0	2018.08.10	ISSUED FOR TENDER
I/R	DATE	DESCRIPTION

PROJECT NUMBER

60247924

SHEET TITLE

KIRKCALDY LIFT STATION
STRUCTURAL
SECTIONS

SHEET NUMBER

S301

Project Management Initials:Designer: Designer Checked: Checker Approved: Approver ANSI D 559mm x 864mm
Last Plotted: 12/18/2018 10:43:08 AM
Filename: P:\60247924\000-CAD\01-MODELS\S\Design Files\60247924-MOD-00-S_V17_klippenstinek.rvt
Printed on ___ % Post-Consumer Recycled Content Paper

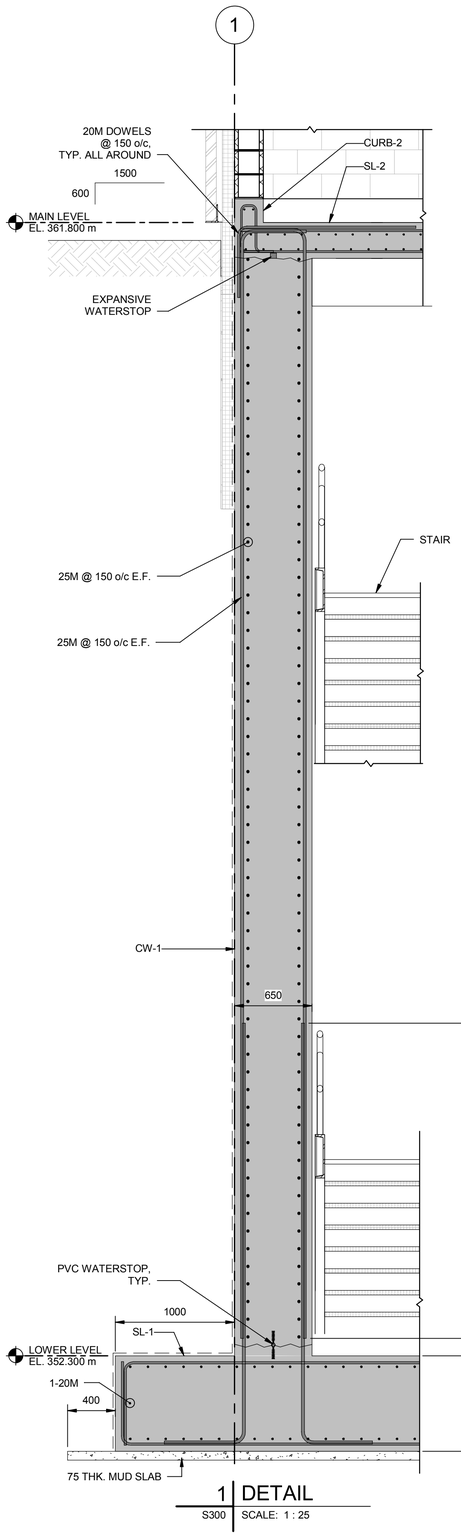

1 | DETAIL

S300 | SCALE: 1 : 25

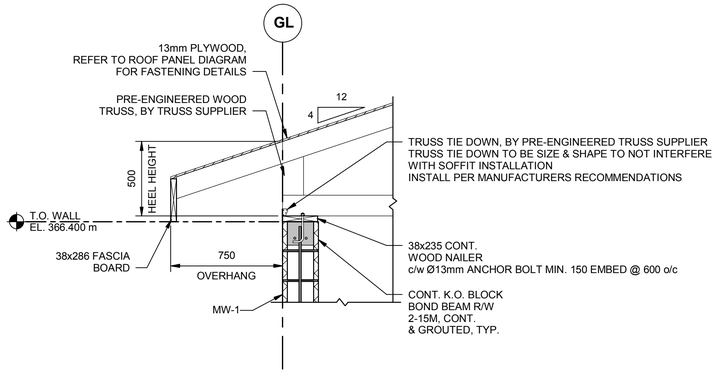

3 | TYPICAL EAVE DETAIL

S300 | SCALE: 1 : 20

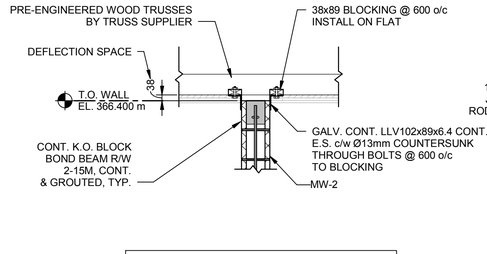

4 | TYPICAL INTERIOR WALL DETAIL

S300 | SCALE: 1 : 20

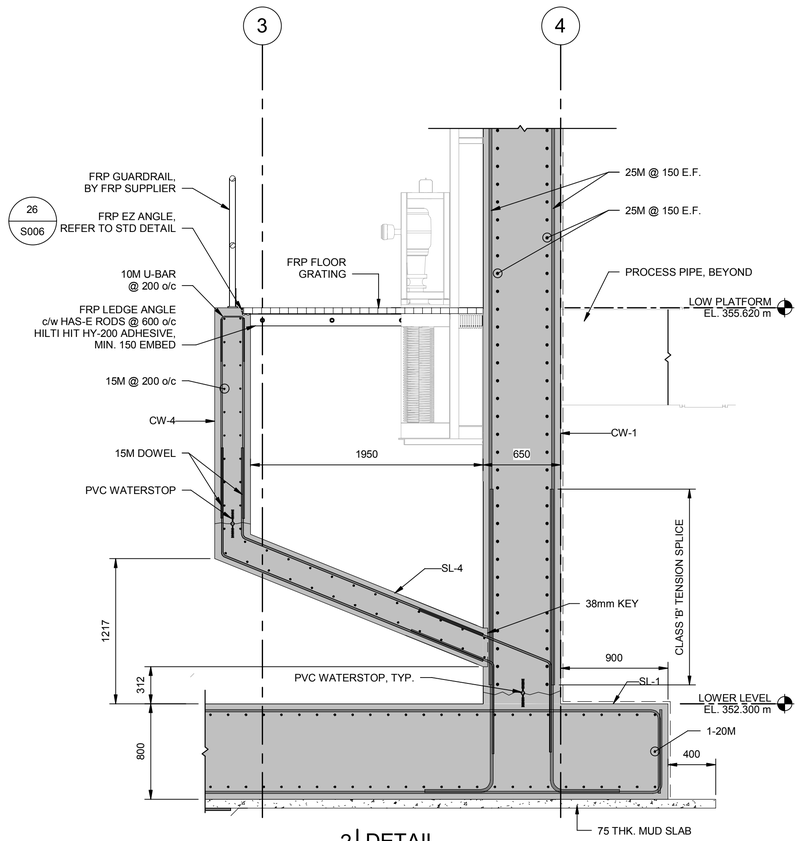

2 | DETAIL

S300 | SCALE: 1 : 25

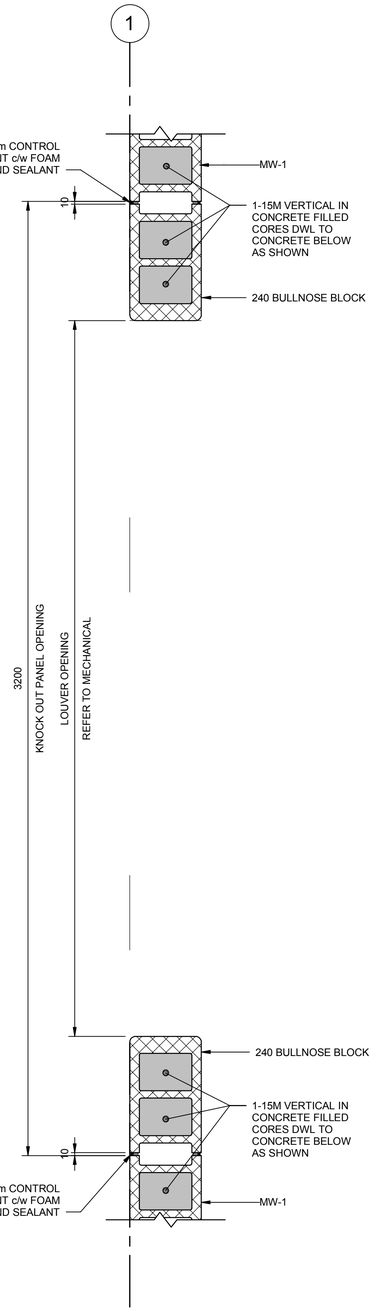

5 | DETAIL

S101 | SCALE: 1 : 10

This drawing has been prepared for the use of AECOM's client and may not be used, reproduced or relied upon by third parties, except as agreed by AECOM and as client, as required by law or for use by governmental reviewing agencies. AECOM accepts no responsibility, and denies any liability whatsoever, to any party that modifies this drawing without AECOM's express written consent. Do not scale this document. All measurements must be obtained from the stated dimensions.

AECOM

PROJECT

City of Brandon
Kirkcaldy Lift Station

CLIENT

City of Brandon
Brandon, Manitoba

CONSULTANT

AECOM
99 Commerce Drive
Winnipeg, Manitoba R3P 0Y7
204.477.5381 tel 204.284.2040 fax
www.aecom.com

REGISTRATION

PROVINCE OF MANITOBA
M. M. HOQUE
Member
30114
REGISTERED PROFESSIONAL ENGINEER
2018-12-14

APEGM
Certificate of Authorization
AECOM Canada Ltd.
No. 4671 Date: 2018.12.14

ISSUE/REVISION

I/R	DATE	DESCRIPTION
1	2018.12.14	ISSUED FOR CONSTRUCTION
0	2018.08.10	ISSUED FOR TENDER

PROJECT NUMBER

60247924

SHEET TITLE

KIRKCALDY LIFT STATION
STRUCTURAL
DETAILS

SHEET NUMBER

S400

Project Management Initials:Designer: Designer Checked: Checker Approved: Approver ANSI D 559mm x 864mm
Last Plotted: 12/18/2018 10:43:11 AM
Filename: P:\60247924\000-CAD\01-MODEL\S\S\Design Files\60247924-MOD-00-S_V17_klippenstinek.rvt

Printed on ___% Post-Consumer Recycled Content Paper

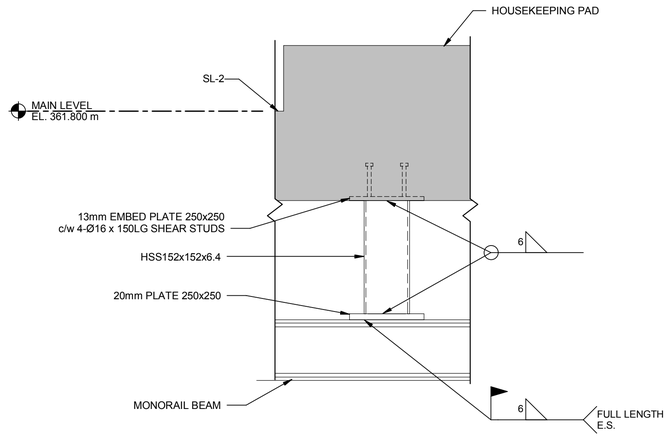

1 | DETAIL
S300 | SCALE: 1 : 10

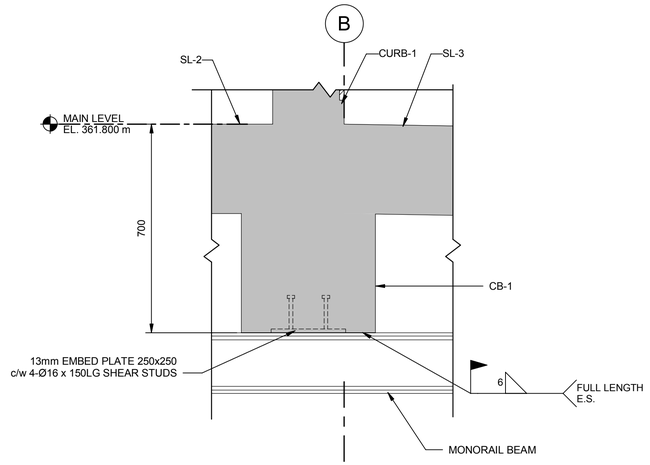

2 | DETAIL
S300 | SCALE: 1 : 10

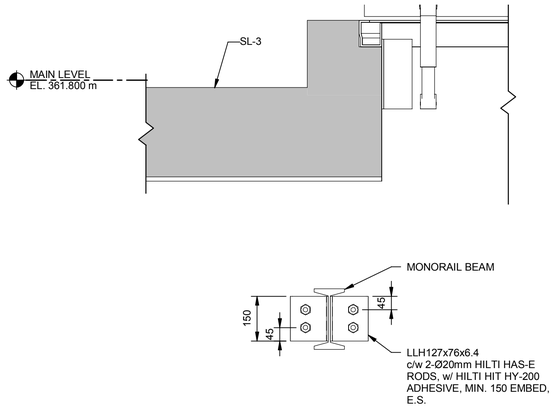

3 | DETAIL
S102 | SCALE: 1 : 10

NOTE:
AT ALL FIELD WELDED CONNECTION LOCAITONS
APPLY TWO COATS OF ZINC RICH PRIMER
AND ONE COAT OF ZINC PAINT

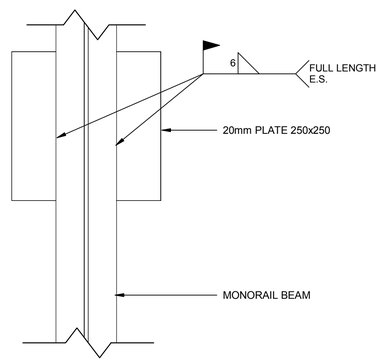

4 | DETAIL
S102 | SCALE: 1 : 5

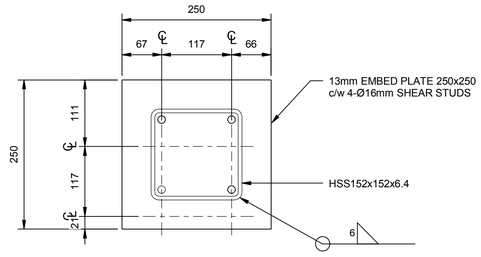

5 | DETAIL
S102 | SCALE: 1 : 5

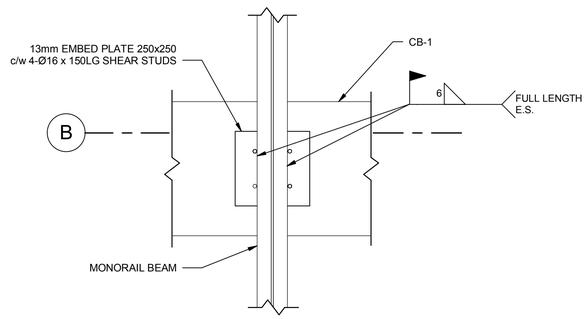

6 | DETAIL
S102 | SCALE: 1 : 10

This drawing has been prepared for the use of AECOM's client and may not be used, reproduced or relied upon by third parties, except as agreed by AECOM and as required by law or for use by governmental reviewing agencies. AECOM accepts no responsibility, and denies any liability whatsoever, to any party that modifies this drawing without AECOM's express written consent. Do not scale this document. All measurements must be obtained from the stated dimensions.

AECOM

PROJECT

City of Brandon
Kirkcaldy Lift Station

CLIENT

City of Brandon
Brandon, Manitoba

CONSULTANT

AECOM
99 Commerce Drive
Winnipeg, Manitoba R3P 0Y7
204.477.5381 tel 204.284.2040 fax
www.aecom.com

REGISTRATION

PROVINCE OF MANITOBA
M. M. HOQUE
Member
30114
REGISTERED PROFESSIONAL ENGINEER
2018-12-14

APEGM
Certificate of Authorization
AECOM Canada Ltd.
No. 4671 Date: 2018.12.14

ISSUE/REVISION

I/R	DATE	DESCRIPTION
2	2018.12.14	ISSUED FOR CONSTRUCTION
1	2018.08.15	ADDENDUM
0	2018.08.10	ISSUED FOR TENDER

PROJECT NUMBER

60247924

SHEET TITLE

KIRKCALDY LIFT STATION
STRUCTURAL
MONORAIL DETAILS

SHEET NUMBER

S401

Project Management Initials:Designer: Designer Checked: Checker Approved: Approver ANSI D 559mm x 864mm
Last Plotted: 12/18/2018 10:43:11 AM
Filename: P:\60247924\000-CAD\01-MODEL\SIS\Design Files\60247924-MOD-00-S_V17_klippenstinek.rvt
Printed on ___% Post-Consumer Recycled Content Paper

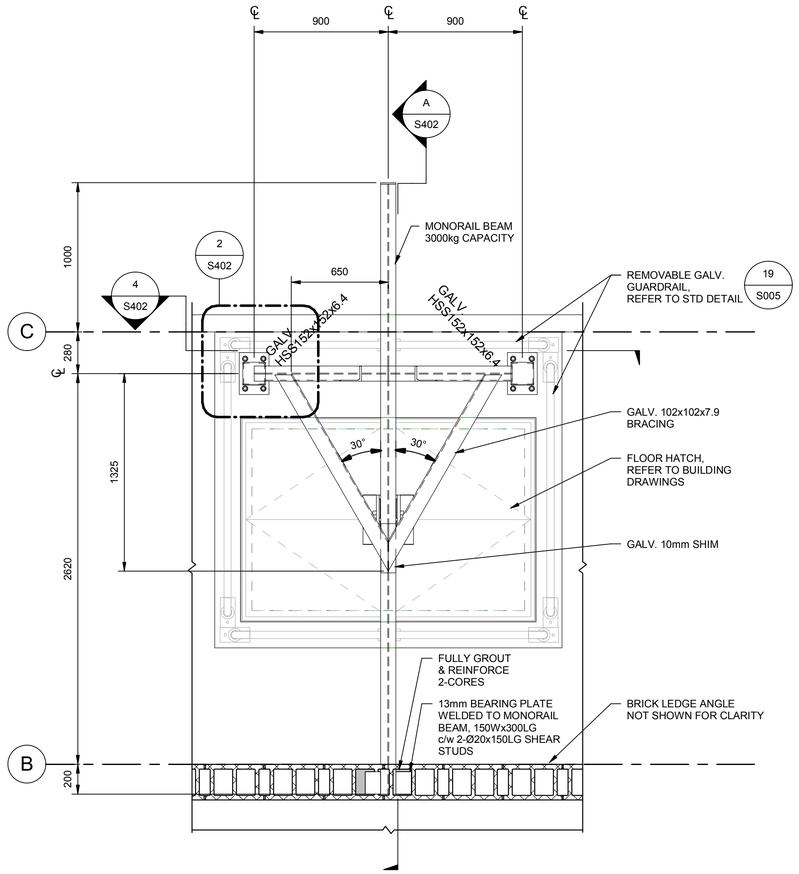

1 | EXTERIOR MONORAIL PLAN DETAIL
S103 | SCALE: 1 : 20

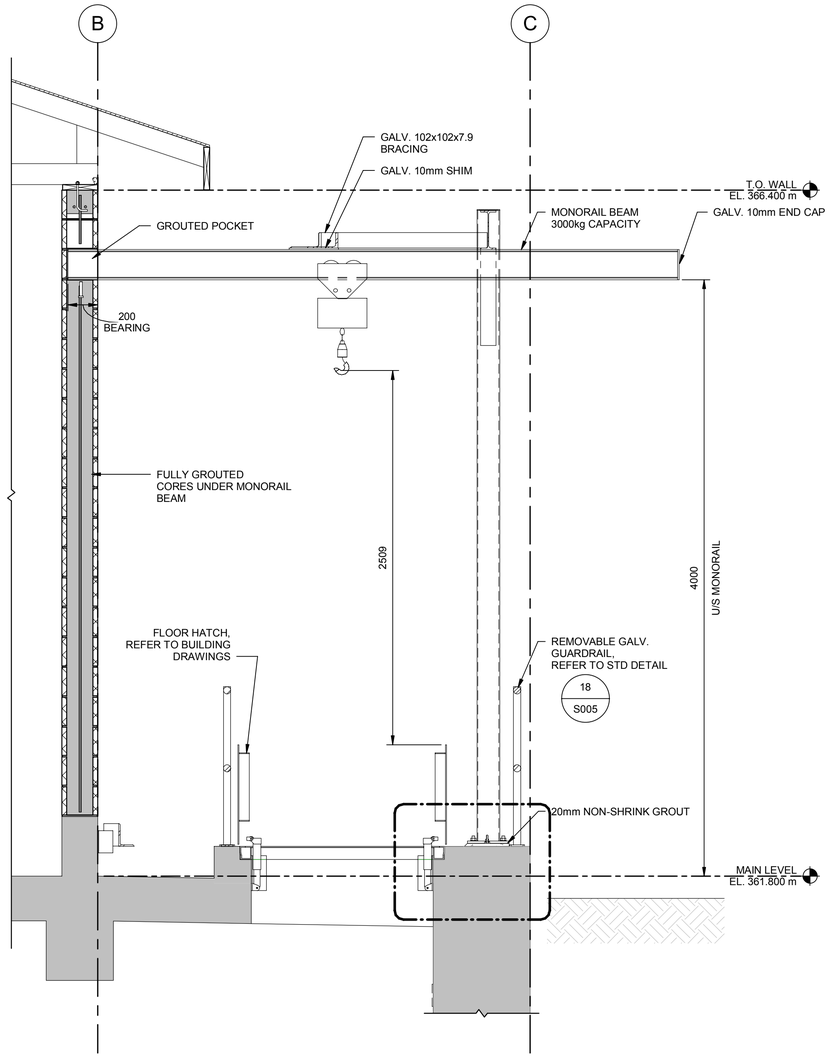

A | SECTION
S402 | SCALE: 1 : 20

NOTE:
AT ALL FIELD WELDED CONNECTION LOCAITONS
APPLY TWO COATS OF ZINC RICH PRIMER
AND ONE COAT OF ZINC PAINT

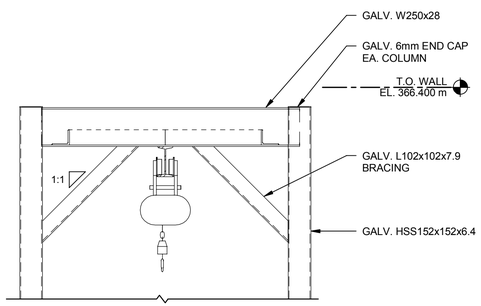

4 | SECTION
S402 | SCALE: 1 : 20

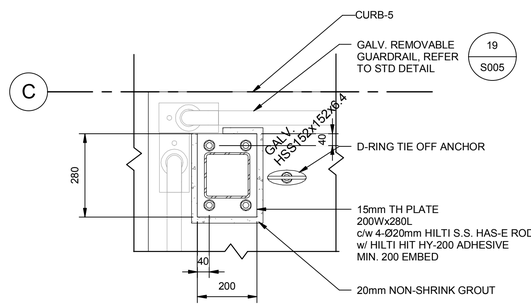

2 | DETAIL
S402 | SCALE: 1 : 10

This drawing has been prepared for the use of AECOM's client and may not be used, reproduced or relied upon by third parties, except as agreed by AECOM and its client, as required by law or for use by governmental reviewing agencies. AECOM accepts no responsibility, and denies any liability whatsoever, to any party that modifies this drawing without AECOM's express written consent. Do not scale this document. All measurements must be obtained from the stated dimensions.

AECOM

PROJECT

City of Brandon
Kirkcaldy Lift Station

CLIENT

City of Brandon
Brandon, Manitoba

CONSULTANT

AECOM
99 Commerce Drive
Winnipeg, Manitoba R3P 0Y7
204.477.5381 tel 204.284.2040 fax
www.aecom.com

REGISTRATION

PROVINCE OF MANITOBA
M. M. HOQUE
Member
30114
REGISTERED PROFESSIONAL ENGINEER
2018-12-14

APEGM
Certificate of Authorization
AECOM Canada Ltd.
No. 4671 Date: 2018.12.14

ISSUE/REVISION

I/R	DATE	DESCRIPTION
2	2018.12.14	ISSUED FOR CONSTRUCTION
1	2018.08.15	ADDENDUM
0	2018.08.10	ISSUED FOR TENDER

PROJECT NUMBER

60247924

SHEET TITLE

KIRKCALDY LIFT STATION

SHEET NUMBER

S402

Project Management Initials:Designer: Designer Checked: Checker Approved: Approver ANSI D 559mm x 864mm
Last Plotted: 12/18/2018 10:43:13 AM
Filename: P:\60247924\000-CAD\01-MODELS\S\Design Files\60247924-MOD-00-S_V17_klippenstinek.rvt
Printed on ___% Post-Consumer Recycled Content Paper

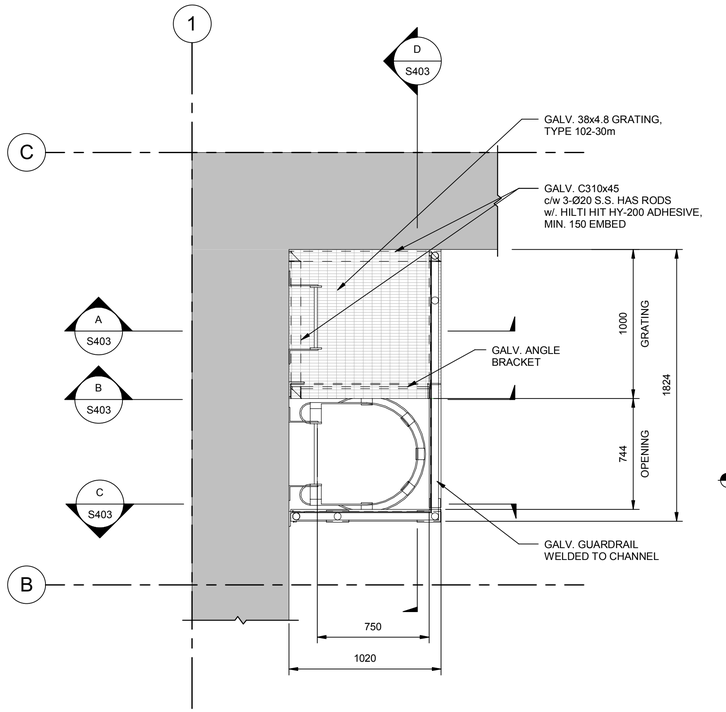

1 | PUMP ROOM REST PLATFORM FRAMING PLAN

S100 | SCALE: 1 : 20

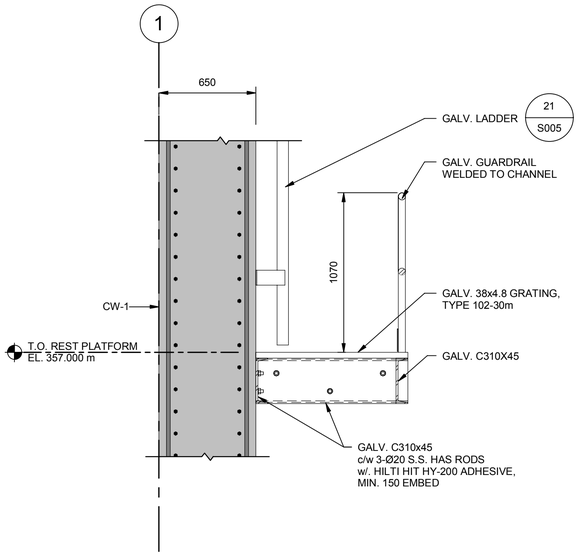

A | SECTION

S403 | SCALE: 1 : 20

B | SECTION

S403 | SCALE: 1 : 20

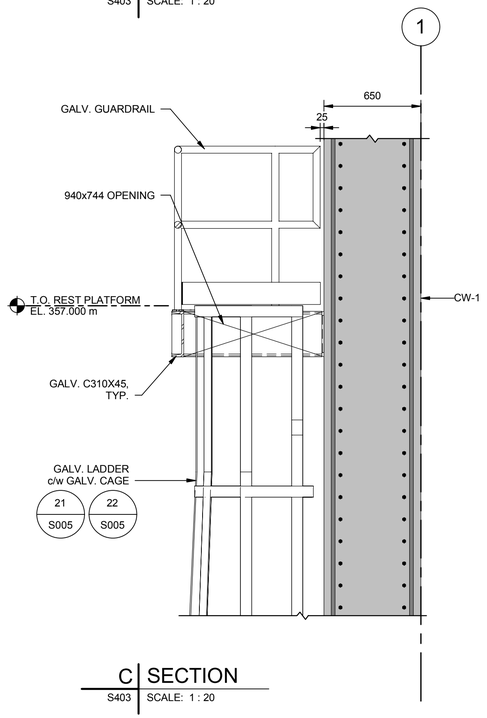

C | SECTION

S403 | SCALE: 1 : 20

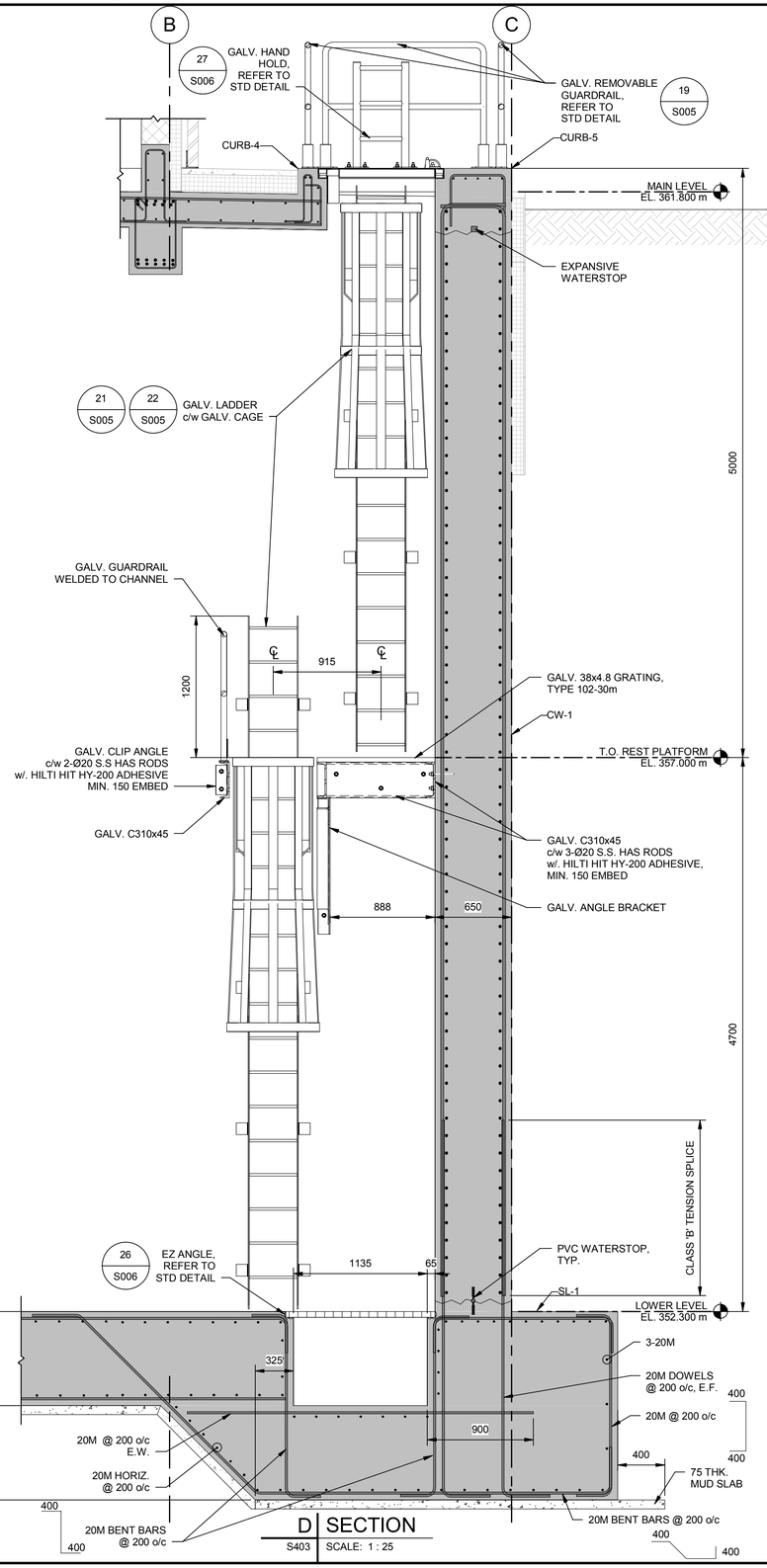

D | SECTION

S403 | SCALE: 1 : 25

This drawing has been prepared for the use of AECOM's client and may not be used, reproduced or relied upon by third parties, except as agreed by AECOM and as stated, as required by law or for use by governmental reviewing agencies. AECOM accepts no responsibility, and denies any liability whatsoever, to any party that modifies this drawing without AECOM's express written consent. Do not scale this document. All measurements must be obtained from the stated dimensions.

AECOM

PROJECT

City of Brandon
Kirkcaldy Lift Station

CLIENT

City of Brandon
Brandon, Manitoba

City of BRANDON

CONSULTANT

AECOM
99 Commerce Drive
Winnipeg, Manitoba R3P 0Y7
204.477.5381 tel 204.284.2040 fax
www.aecom.com

REGISTRATION

PROVINCE OF MANITOBA
M. M. HOQUE
Member
30114
REGISTERED PROFESSIONAL ENGINEER
2018-12-14

APEGM
Certificate of Authorization
AECOM Canada Ltd.
No. 4671 Date: 2018.12.14

ISSUE/REVISION

1	2018.12.14	ISSUED FOR CONSTRUCTION
0	2018.08.10	ISSUED FOR TENDER
I/R	DATE	DESCRIPTION

PROJECT NUMBER

60247924

SHEET TITLE

KIRKCALDY LIFT STATION
STRUCTURAL
DETAILS

SHEET NUMBER

S403

Project Management Initials:Designer: Designer Checked: Checker Approved: Approver ANSI D 559mm x 864mm

Last Plotted: 12/18/2018 10:43:14 AM
Filename: P:\60247924\000-CAD\01-MODELS\S\Design Files\60247924-MOD-00-S_V17_klippenstinek.rvt

Printed on ___% Post-Consumer Recycled Content Paper

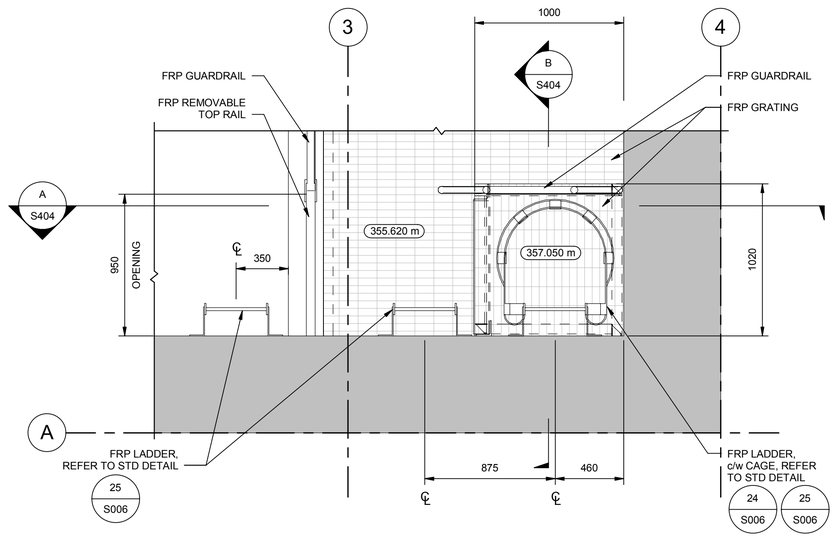

1 | WET WELL(S) REST PLATFORM FRAMING PLAN
S100 | SCALE: 1 : 20

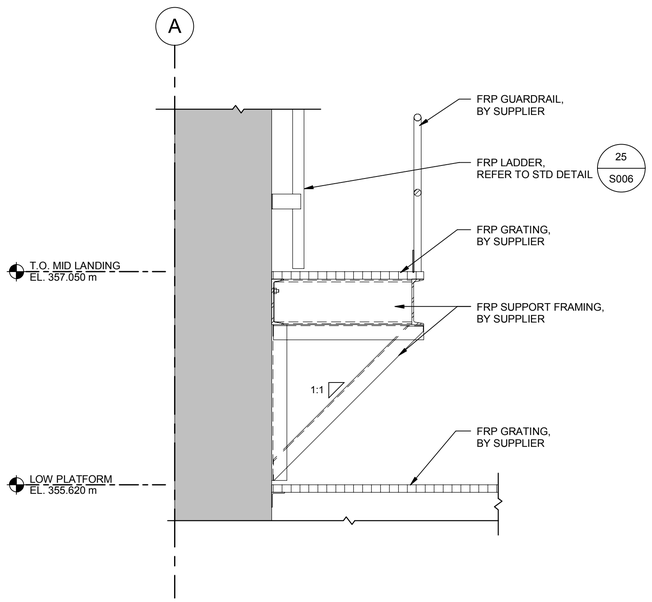

B | SECTION
S404 | SCALE: 1 : 20

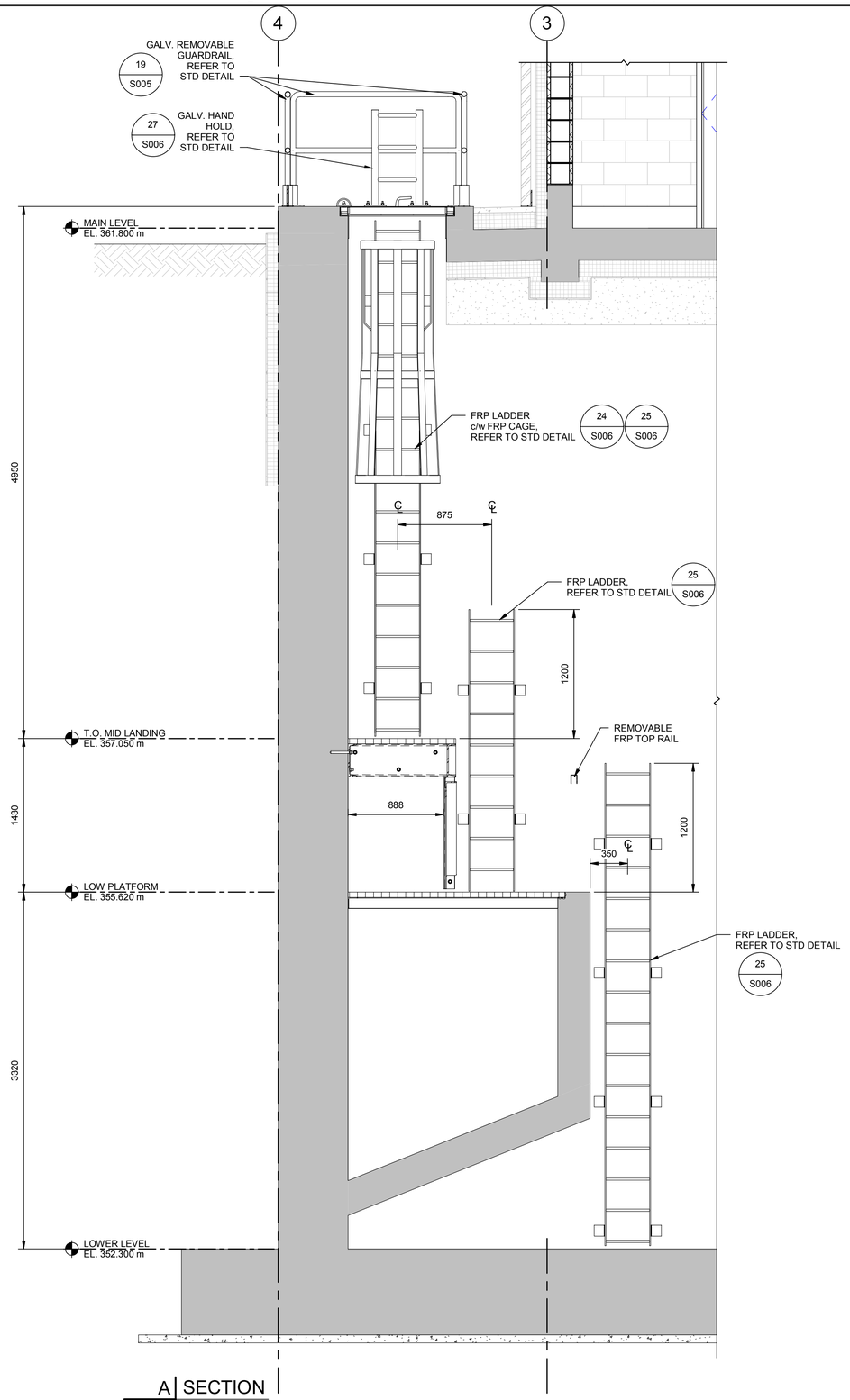

A | SECTION
S100 | SCALE: 1 : 25

This drawing has been prepared for the use of AECOM's client and may not be used, reproduced or relied upon by third parties, except as agreed by AECOM and its client, as required by law or for use by governmental reviewing agencies. AECOM accepts no responsibility, and denies any liability whatsoever, to any party that modifies this drawing without AECOM's express written consent. Do not scale this document. All measurements must be obtained from the stated dimensions.

AECOM

PROJECT

City of Brandon
Kirkcaldy Lift Station

CLIENT

City of Brandon
Brandon, Manitoba

CONSULTANT

AECOM
99 Commerce Drive
Winnipeg, Manitoba R3P 0Y7
204.477.5381 tel 204.284.2040 fax
www.aecom.com

REGISTRATION

PROVINCE OF MANITOBA
M. M. HOQUE
Member
30114
REGISTERED PROFESSIONAL ENGINEER
2018-12-14

APEGM
Certificate of Authorization
AECOM Canada Ltd.
No. 4671 Date: 2018.12.14

ISSUE/REVISION

1	2018.12.14	ISSUED FOR CONSTRUCTION
0	2018.08.10	ISSUED FOR TENDER
I/R	DATE	DESCRIPTION

PROJECT NUMBER

60247924

SHEET TITLE

KIRKCALDY LIFT STATION
STRUCTURAL
DETAILS

SHEET NUMBER

S404

Project Management Initials:Designer: Designer Checked: Checker Approved: Approver ANSI D 559mm x 864mm
Last Plotted: 12/18/2018 10:43:16 AM
Filename: P:\60247924\000-CAD\01-MODELS\SIDesign Files\60247924-MOD-00-S_V17_klippenslinek.rvt
Printed on ___% Post-Consumer Recycled Content Paper

Project Management Initials:Designer: Designer Checked: Checker Approved: Approver ANSI D 559mm x 864mm

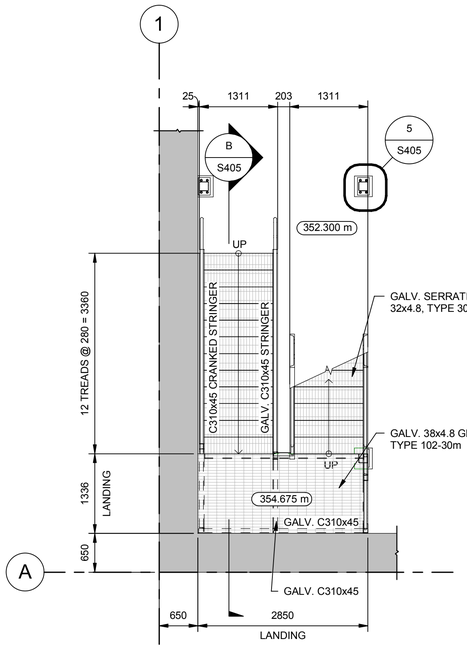

1 | T.O. BOTTOM LANDING

B300 | SCALE: 1 : 50

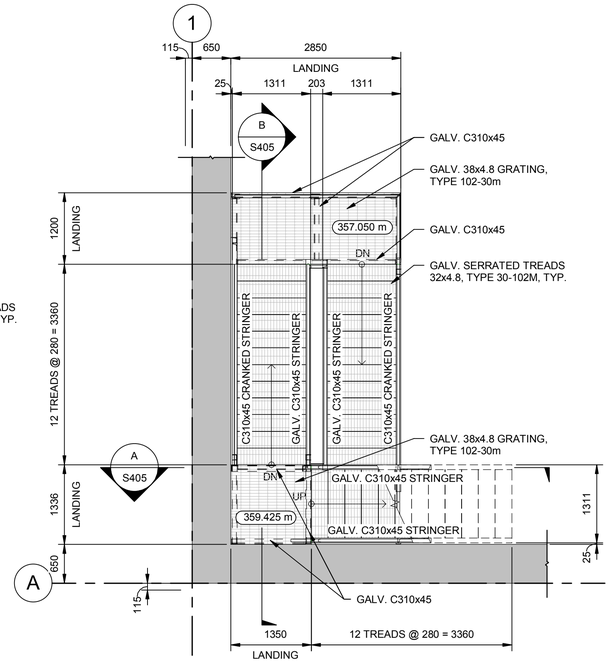

3 | T.O. TOP LANDING

B300 | SCALE: 1 : 50

NOTE:
AT ALL FIELD WELDED CONNECTION LOCAITONS
APPLY TWO COATS OF ZINC RICH PRIMER
AND ONE COAT OF ZINC PAINT

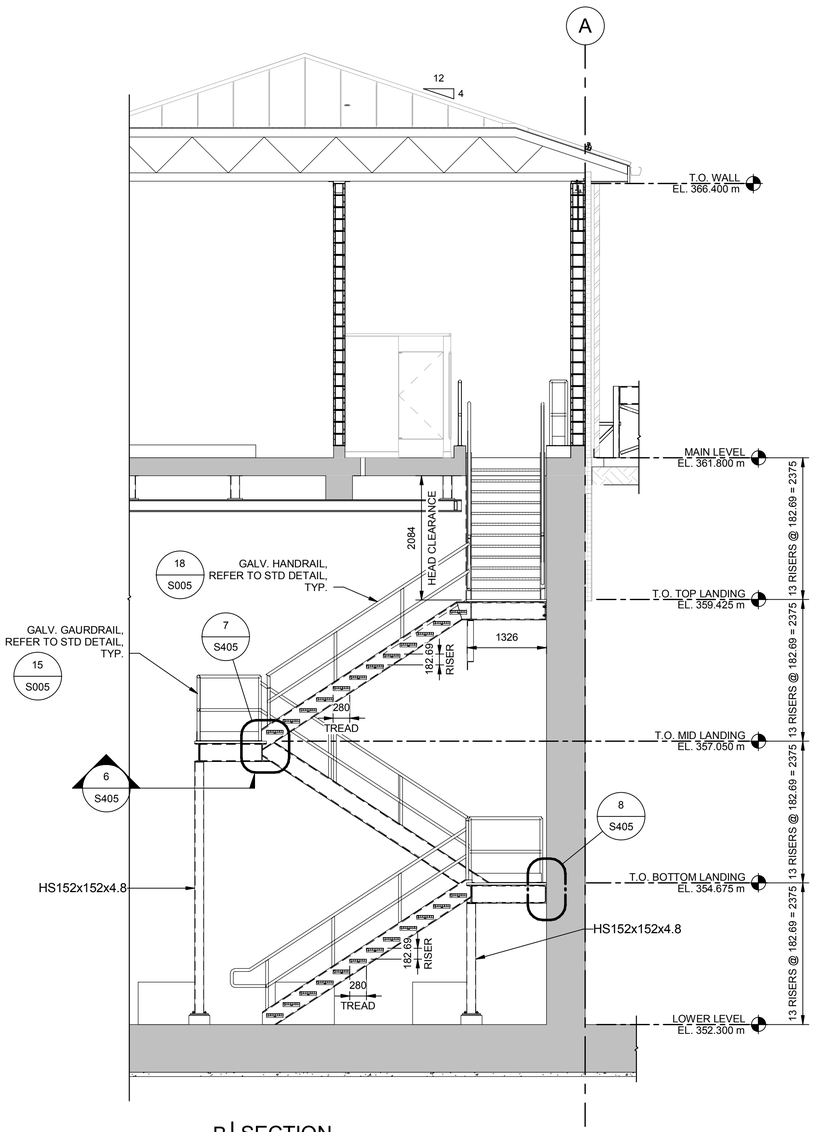

B | SECTION

S100 | SCALE: 1 : 50

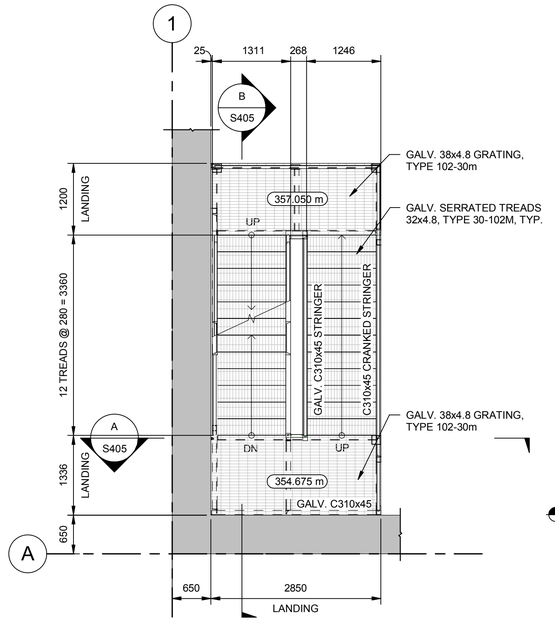

2 | T.O. MID LANDING

B300 | SCALE: 1 : 50

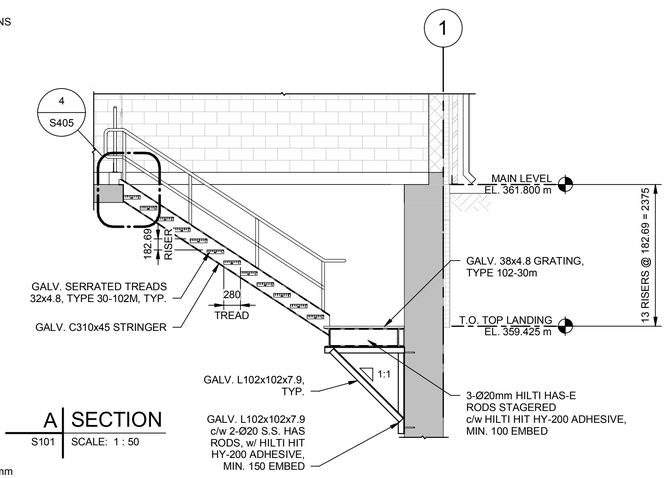

A | SECTION

S101 | SCALE: 1 : 50

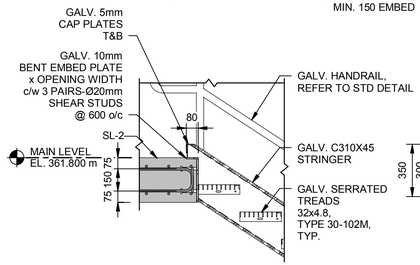

4 | DETAIL

S405 | SCALE: 1 : 20

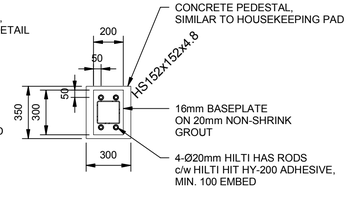

5 | PLAN DETAIL

S405 | SCALE: 1 : 20

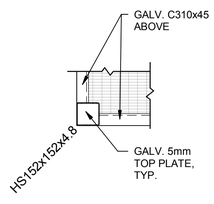

6 | SECTION

S405 | SCALE: 1 : 20

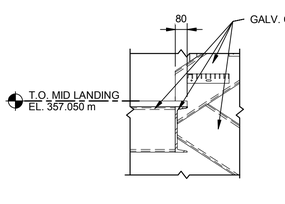

7 | DETAIL

S405 | SCALE: 1 : 20

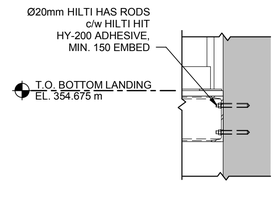

8 | DETAIL

S405 | SCALE: 1 : 20

This drawing has been prepared for the use of AECOM's client and may not be used, reproduced or relied upon by third parties, except as agreed by AECOM and its client, as required by law or for use by governmental reviewing agencies. AECOM accepts no responsibility, and denies any liability whatsoever, to any party that modifies this drawing without AECOM's express written consent. Do not scale this document. All measurements must be obtained from the stated dimensions.

AECOM

PROJECT

City of Brandon
Kirkcaldy Lift Station

CLIENT

City of Brandon
Brandon, Manitoba

CONSULTANT

AECOM
99 Commerce Drive
Winnipeg, Manitoba R3P 0Y7
204.477.5381 tel 204.284.2040 fax
www.aecom.com

REGISTRATION

PROVINCE OF MANITOBA
M. Hoque
M. HOQUE
Member
30114
REGISTERED PROFESSIONAL ENGINEER
2018-12-14

APEGM
Certificate of Authorization
AECOM Canada Ltd.
No. 4671 Date: 2018.12.14

ISSUE/REVISION

1	2018.12.14	ISSUED FOR CONSTRUCTION
0	2018.08.10	ISSUED FOR TENDER
I/R	DATE	DESCRIPTION

PROJECT NUMBER

60247924

SHEET TITLE

KIRKCALDY LIFT STATION
STRUCTURAL
DETAILS

SHEET NUMBER

S405

Last Plotted: 12/18/2018 10:43:19 AM
Filename: P:\60247924\000-CAD\01-MODELS\Design Files\60247924-MOD-00-S_V17_klippenslinek.rvt

Printed on ___% Post-Consumer Recycled Content Paper

Project Management Initials: ____ Designer: ____ Checked: ____ Approved: ____ ANSI D 864mm x 559mm

Last saved by: SCHWARZERM(2018-12-14) Last Plotted: 2018-12-14
Filename: P:\60247924\000-CAD\02-SHEETS\N\60247924-SHT-00-0000-N-0001.DWG

Printed on ___% Post-Consumer Recycled Content Paper

VALVE SYMBOLS

SYMBOL	TYPE	ABBREVIATION
	BALL VALVE (N.O.)	BV
	BALL VALVE (N.C.)	BV
	CHECK VALVE	CV
	BUTTERFLY VALVE	BFV
	PLUG VALVE (N.O.)	PV
	PLUG VALVE (N.C.)	PV
	GATE VALVE (N.O.)	GV
	GATE VALVE (N.C.)	GV
	BALL CHECK VALVE	BCV
	KNIFE GATE VALVE	KV
	IRIS VALVE	IV
	NEEDLE VALVE	NV
	GLOBE VALVE	GLV
	BACKFLOW PREVENTER	BFP
	BALANCING DAMPER	BD
	DOUBLE LEAF CHECK VALVE	CV
	DUCKBILL CHECK VALVE	DCV
	PINCH VALVE	PNV
	TELESCOPIC VALVE	TSV
	DIAPHRAGM VALVE	DV
	MUD VALVE	MDV
	FLOAT VALVE	FV

SYMBOL	TYPE	ABBREVIATION
	PRESSURE REGULATOR EXTERNAL PRESSURE TAP	PRV
	PRESSURE REGULATOR SELF CONTAINED	PRV
	BACK PRESSURE REGULATOR EXTERNAL PRESSURE TAP	BPV
	BACK PRESSURE REGULATOR SELF CONTAINED	BPV
	THERMAL SHUT OFF VALVE	TOV
	PRESSURE RELIEF VALVE	PRV
	VACUUM RELIEF VALVE	PRV
	PRESSURE & VACUUM RELIEF VALVE	PRV
	PRESSURE RELIEF VALVE (RUPTURE DISC)	RD
	VACUUM RELIEF VALVE (RUPTURE DISC)	RD
	THREE-WAY VALVE	3W
	FOUR-WAY VALVE	4W
	ANGLE VALVE	AV

GATE SYMBOLS

SYMBOL	TYPE	ABBREVIATION
	FLAP GATE	FLG
	LEVEL CONTROL GATE	LCG
	SLIDE GATE	SG

SYMBOL	TYPE	ABBREVIATION
	SLUICE GATE	SLG
	STOP LOG	SL
	WEIR GATE	WG

ACTUATORS

	DIAPHRAGM, PRESSURE
	DIAPHRAGM, SPRING
D	DIGITAL
M	MOTORIZED
	PISTON
S	SOLENOID

PROCESS LINE TYPES

	MAJOR PROCESS LINE
	MINOR PROCESS LINE
	PROPOSED STRUCTURE
	VENDOR PACKAGE SUPPLY BOUNDARY
	EXISTING PIPING & EQUIPMENT
	EXISTING STRUCTURE
E	INSULATED PIPE (WITH HEAT TRACING)
	FUTURE PROCESS LINE
	EXISTING ITEMS TO BE REMOVED

ANNOTATION SYMBOLS

PIPE IDENTIFICATION

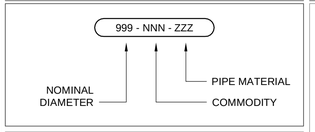

CHANNEL / CHUTE IDENTIFICATION

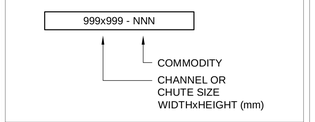

INSTRUMENT SIGNAL IDENTIFICATION



EQUIPMENT & VALVE IDENTIFICATION

MOTORIZED EQUIPMENT

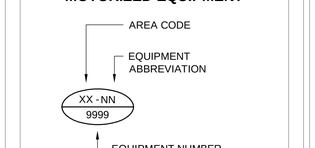

NON-MOTORIZED EQUIPMENT / VALVES

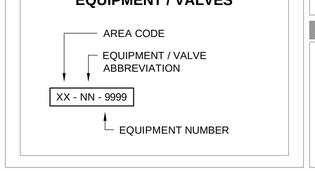

PROCESS LINE IDENTIFICATION

FLOW: LEFT TO RIGHT

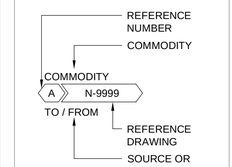

FLOW: BOTH DIRECTIONS

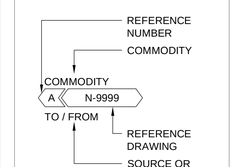

FLOW: RIGHT TO LEFT

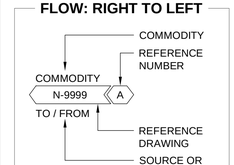

GENERAL SYMBOLS

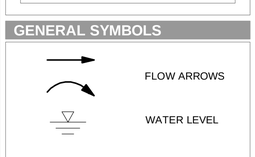

STANDARD ABBREVIATIONS

EQUIPMENT ABBREVIATIONS

AC	AIR COMPRESSOR
AD	AIR DRYER
AER	SURFACE AERATOR
AF	AIR FILTER
AFC	AFTERCOOLER
AR	AIR RECEIVER
AST	AIR STRIPPER
AWH	AIR WASH
BA	BIN ACTIVATOR
BPS	BELT FILTER PRESS
BIF	BIOFILTER
BL	BLOWER
BR	BRUSH
BRM	BARMINUTOR
CBA	COMPOST BAY
CBD	COARSE BUBBLE DIFFUSER
CDR	PRIMARY CLARIFIER DRIVE
CFG	CENTRIFUGE
CFL	CUT THROAT FLUME
CGS	CHLORINE GAS SCRUBBER
CHF	CHEMICAL FEEDER
CHL	CHLORINATOR
CMM	COMMINUTOR
CMP	COMPACTOR
COL	COLLECTOR
CON	CONVEYOR
COV	COVER
CP	COMPRESSOR
CPW	CIPOLETTI WEIR
CRN	CRANE OR HOIST
CY	CYCLONE
CYL	CYLINDER
DAF	DISSOLVED AIR FLOTATION THICKENER EQUIPMENT
DDR	DAF DRIVE
DIF	DIFFUSER
DR	DRIVE
DST	ROTARY DISTRIBUTOR
DWS	DEWATERING SCREW
EF	EXHAUST FAN
EV	EVAPORATOR
EXT	EXPANSION TANK
FAR	FLAME ARRESTER
FBD	FINE BUBBLE DIFFUSER
FCH	FLAME CHECK
FCV	FLOW CONTROL VALVE (MODULATING)
FDR	FERMENTER DRIVE
FIS	FILTER SEPARATOR
FLC	FLOCCULATOR
FLG	FLAP GATE
FLT	FILTER
FOS	FOAM SEPARATOR
FV	FLOW CONTROL VALVE (OPEN/CLOSE)
GBT	GRAVITY BELT THICKENER
GCL	GRIT CLASSIFIER
GDR	GRINDER
HPG	HAND PULL GATE
HSS	HAULED SEPTAGE SCREEN
HV	HAND VALVE
INC	INCINERATOR
INJ	CHEMICAL INJECTOR
LAG	LAGOON
LCG	LEVEL CONTROL GATE
LCP	LOCAL CONTROL PANEL
LG	LEVEL SIGHT GLASS OR CALIBRATION COLUMN
LCV	LEVEL CONTROL VALVE (MODULATING)
LGR	LINEAR GRILLE
LV	LEVEL CONTROL VALVE (OPEN/CLOSE)
MB	MEMBRANE
MCP	MASTER CONTROL PANEL
MLW	MIXED LIQUOR WASTING CHAMBER
MWA	MICROWAVE ANALYZER
MXR	MIXER
ODU	OZONE DESTRUCT UNIT
P	PUMP
PBF	PALMER-BOWLUS FLUME
PBP	PERFORATED BAFFLE PLATE
PCN	PARTICLE COUNTER
PDC	POWER DISTRIBUTION CENTRE
PFL	PARSHALL FLUME
PLT	PELLETIZER
PSE	PLATE SETTLER
PSU	POWER SUPPLY UNIT
PT	PRESSURE TANK
PTO	POWER TAKE OFF/REDUCER
RBC	ROTATING BIOLOGICAL CONTACTOR
RCO	RESIDUAL COLLECTOR
RDT	ROTARY DRUM THICKENER
RM	ROTAMETER
SCB	SCRUBBER
SCM	SCUM COLLECTION MECHANISM
SCR	SCREENING EQUIPMENT
SCW	SCUM WEIR (ROTATING)
SDR	SECONDARY CLARIFIER DRIVE
SEP	SEPARATOR
SG	SLIDE GATE
SL	STOP LOG
SLC	SLUDGE COLLECTOR
SLG	SLUICE GATE
SM	STATIC MIXER
SMP	SAMPLER
SOL	SOLENOID ACTUATOR
SSK	SLUDGE SKIMMER
SRC	SURGE CHAMBER
T	TANK
TB	TURBIDITY METER
TCP	TEMPERATURE CONTROL PANEL
UV	ULTRA VIOLET LAMP BANK
V	VALVE
VAP	VAPORIZER
VDR	VORTEX DRIVE
VFD	VARIABLE FREQUENCY DRIVE
VNT	VENT EQUIPMENT
VSD	VARIABLE SPEED DRIVE
W	WEIR
WG	WEIR GATE

COMMODITY ABBREVIATIONS

AHP	AIR (HIGH PRESSURE)
AIR	AIR
ASH	ASH
AWH	AIR WASH
BCA	BURNER COMBUSTION AIR
BG	BIOGAS
BIS	BIOSOLIDS
BW	BACKWASH WATER (FILTERED)
BWR	BACKWASH RETURN
BWW	BACKWASH WASTE WATER
CA	COMPRESSED AIR (SERVICE)
CDW	WATER (CONDENSATE)
CEN	CENTRATE
CFE	CHLORINATED FINAL EFFLUENT
CLD	CLARIFIER BLOWDOWN
CPA	COMPOST PROCESS AIR
DCL	DECANT
DEWS	WET DEWATERED SLUDGE
DFE	DECHLORINATED FINAL EFFLUENT
DGC	CIRCULATED SLUDGE GAS
DGF	SLUDGE GAS FUEL
DGH	SLUDGE GAS (HIGH PRESSURE)
DRA	DRAIN
DS	DIGESTED SLUDGE
DSB	DAF SUBNATANT
DSE	DISINFECTED SECONDARY EFFLUENT
FCH	FLAME CHECK
FE	FINAL EFFLUENT
FLI	FILTER INFLUENT
FLW	FLOCCULATION BASIN EFFLUENT
FOA	FOUL AIR
FSL	FERMENTED SLUDGE
FSU	FERMENTER SUPERNATANT
FTW	FILTER TO WASTE
FLT	FILTRATE
FY	FERMENTER SCUM
GAC	ACTIVATED CARBON (GRANULAR)
GACL	ACTIVATED CARBON (SOLUTION)
GACS	RECARBONATION SLUDGE
GR	GRIT
GRS	GREASE
GTS	GRAVITY THICKENED SLUDGE
HF	HYDRAULIC FLUID
HFS	FLUOSILIC ACID
HS	HAULED SEPTAGE
HSC	HAULED SEPTAGE SCREENINGS
HTS	HEAT TREATED SLUDGE
IA	INSTRUMENT AIR
INF	INFLUENT
LPC	LOW PRESSURE CONDENSATE
ML	MIXED LIQUOR
MS	MIXED SLUDGE
NG	NATURAL GAS
NML	NITRIFIED MIXED LIQUOR
OF	OVERFLOW
PAC	ACTIVATED CARBON (SLURRY)
PDG	PURIFIED DIGESTER GAS
PE	PRIMARY EFFLUENT
PI	PRIMARY INFLUENT
PA	PROCESS AIR
PRO	PROPANE GAS
PS	PRIMARY SLUDGE
PY	PRIMARY SCUM
RA	RETURN AIR
RAS	RETURN ACTIVATED SLUDGE
REC	RECYCLE
RES	RESIDUAL
RSSC	RAW SEWAGE SCREENING
RSL	RECIRCULATED SLUDGE
SAM	SAMPLE
SAN	SANITARY SEWER
SBD	SCRUBBER BLOWDOWN
SCN	SCREENINGS
SCS	SCRUBBING SOLUTION
SD	SMOKE DAMPER
SE	SECONDARY CLARIFIER EFFLUENT
SLH	SETTLED HEATED SLUDGE
SPY	SCREENED PRIMARY SCUM
SRHS	RAW HAULED SEPTAGE
SRS	SCREENED RAW SEWAGE
SRSW	RAW SEWAGE
STE	STEAM
STW	STORM SEWER
SUB	SUBNATANT
SUP	SUPERNATANT
SVC	SCAVENGER VACUUM
SW	SEAL WATER
SY	SECONDARY CLARIFIER SCUM
TBS	THICKENER BOTTOM SLUDGE
TDS	THICKENED DIGESTED SLUDGE
TOF	THICKENER OVERFLOW
TPS	THICKENED PRIMARY SLUDGE
TR	THICKENER RECYCLE
TSL	THICKENER UNDERFLOW
TWAS	THICKENED WASTE ACTIVATED SLUDGE
UTA	UTILITY AIR
VAC	VACUUM
W1	POTABLE WATER
W2	POTABLE WATER (AFTER BACKFLOW PREVENTER)
W3	NON-POTABLE WATER (PROCESS EFFLUENT)
WAS	WASTE ACTIVATED SLUDGE
WNS	WASTE NITRIFIED SLUDGE
WW	WELL WATER

CHEMICAL ABBREVIATIONS

AAG	ANHYDROUS AMMONIA, GAS
AAL	ANHYDROUS AMMONIA, LIQUID
AAS	AMMONIUM HYDROXIDE SOLUTION
AAV	AMMONIA GAS (VACUUM)
ACE	ACETIC ACID
ACS	ACTIVATED SILICA
ACTL	ACETYLENE
ALS	ALUM SOLUTION
ALUM	ALUM
ASH	ASH
BRS	BRINE SOLUTION
BRW	BRINE WASTE
CAO	LIME (QUICK LIME)
CAOH	LIME (HYDRATED)
CDG	CARBON DIOXIDE
CDL	CARBON DIOXIDE LIQUID
CDW	WATER (CONDENSATE)
CI	SODIUM HEXAMETA PHOSPHATE
CLD	CHLORINE DIOXIDE
CLG	CHLORINE GAS (PRESSURE)
CLL	CHLORINE LIQUID
CLS	CHLORINE SOLUTION
CLV	CHLORINE GAS (VACUUM)
CS	CAUSTIC SODA
CSS	DILUTE CAUSTIC SODA
CUS	COPPER SULFATE
FC	FERRIC CHLORIDE
FCPL	FERRIC CHLORIDE PICKLE LIQUOR
FEC	FERROUS CHLORIDE
FES	FERROUS SULPHATE
FS	FERRIC SULFATE
FSS	FERROUS SULFATE
GOX	GASEOUS OXYGEN
HCL	HYDROCHLORIC ACID
HEL	HELIUM
HFS	FLUOSILIC ACID
HG	HYDROGEN GAS
HL	HYDROGEN LIQUID
HP	HYDROGEN PEROXIDE
LM	LIME (DRY)
LMS	LIME SLUDGE
LOX	LIQUID OXYGEN
LS	LIME SLAKER
MET	METHANOL
N2	NITROGEN
NAAL	SODIUM ALUMINATE
NAOH	SODIUM HYDROXIDE
NASF	SODIUM SILICOFLUORIDE
NOX	NITROUS OXIDE
OIA	OZONE IN AIR
OIO	OZONE IN OXYGEN
OW	OZONATED WATER
PHA	PHOSPHORIC ACID
PACL	POLYALUMINUM CHLORIDE
PLY	POLYMER
PP	POTASSIUM PERMANGANATE
PPP	PHOSPHATE
PYPH	POLYPHOSPHATE
RSS	RECIRCULATED SCRUBBER SOLUTION
SA	SULPHURIC ACID
SAS	SODA ASH SOLUTION
SBC	SODIUM BICARBONATE
SBS	SODIUM BISULFITE
SC	SODA ASH
SDG	SULFUR DIOXIDE GAS (PRESSURE)
SDL	SULFUR DIOXIDE LIQUID
SDS	SULFUR DIOXIDE SOLUTION
SDV	SULFUR DIOXIDE GAS (VACUUM)
SH	SODIUM HYPOCHLORITE
SHS	SODIUM HYPOCHLORITE SOLUTION
SS	SODIUM SILICATE
VAC	VACUUM

EQUIPMENT SYMBOLS

MOTORIZED EQUIPMENT

SYMBOL	TYPE	ABBREVIATION
	AIR DRYER BLOWER FAN	AD BL F
	POSITIVE DISPLACEMENT BLOWER	BL
	GRINDER (CHANNEL)	GDR
	GRINDER	GDR

NON-MOTORIZED EQUIPMENT

SYMBOL	TYPE	ABBREVIATION
	INJECTER	INJ
	MIXER (STATIC)	SM
M	MOTOR	-
S	SAMPLER (AUTOMATIC)	SMP

SYMBOL	TYPE	ABBREVIATION
S	SAMPLER (MANUAL)	SMP
	SCREEN (MANUAL)	SCR

PUMPS

SYMBOL	TYPE	ABBREVIATION
	CENTRIFUGAL PUMP	P
	SUBMERSIBLE PUMP	P

PIPE MATERIAL ABBREVIATIONS

CU	COPPER
HDPE	HIGH DENSITY POLYETHYLENE
PVC	POLYVINYL CHLORIDE
PVCT	POLYVINYL CHLORIDE TUBING
SS	STAINLESS STEEL
DWP	DOUBLE WALLED PVC
RCP	REINFORCED CONCRETE PIPE

PIPE LINE DEVICES

	AIR GAP
	AIR INTAKE
	BLIND FLANGE OR FLANGE CONNECTION
	CALIBRATION CHAMBER
	CAP OR PLUG
V	DIFFUSER OR SPRAY NOZZLE
D	DRAIN
	EXPANSION JOINT
	EMERGENCY EYEWASH & SHOWER STATION
	FILTER
	FLAME ARRESTER
	FLEXIBLE CONNECTION
	HOSE REEL
	ORIFICE PLATE
	PRESSURE SENSOR (IN-LINE)
	PULSATION DAMPENER
	REDUCER
	SEPARATOR, AIR
	SEPARATOR, LIQUID
	SIGHT GLASS
	SILENCER
	SPECTACLE BLIND
	STRAINER
	STRAINER, BASKET
T	TRAP
	UNION
XX	UTILITY CONNECTION
	VENT, AIR
	VENT, STEAM
	VENTURI
	QUICK CONNECTOR

This drawing has been prepared for the use of AECOM's client and may not be used, reproduced or relied upon by third parties, except as agreed by AECOM and its client, as required by law or by governmental reviewing agencies. AECOM accepts no responsibility, and denies any liability whatsoever, to any party that modifies this drawing without AECOM's express written consent. Do not scale this document. All measurements must be obtained from stated dimensions.

AECOM

PROJECT

City of Brandon
Kirkcaldy Lift Station

CLIENT

City of Brandon
Brandon, Manitoba

City of BRANDON

CONSULTANT

AECOM
99 Commerce Drive
Winnipeg, Manitoba R3P 0Y7
204.477.5381 tel 204.284.2040 fax
www.aecom.com

REGISTRATION

PROVINCE OF MANITOBA
ORIGINAL SIGNED BY:
P.R. BARSALOU
2018 / 08 / 10
YR. MN. DAY.
REGISTERED PROFESSIONAL ENGINEER

APEGM
Certificate of Authorization
AECOM Canada Ltd.
No. 4671 Date: 2018.12.14

ISSUE/REVISION

1	2018.12.14	ISSUED FOR CONSTRUCTION
0	2018.08.10	ISSUED FOR TENDER
I/R	DATE	DESCRIPTION

PROJECT NUMBER

60247924

SHEET TITLE

KIRKCALDY LIFT STATION
PROCESS
LEGEND & ABBREVIATIONS

SHEET NUMBER

N-001

SIGNAL LINE TYPES

PROPOSED	DESCRIPTION
———————	INSTRUMENT SUPPLY OR PROCESS TAP
———————	UNDEFINED SIGNAL
———————	PNEUMATIC SIGNAL
——— — ———	ELECTRIC SIGNAL
—L—L—L—	HYDRAULIC SIGNAL
—X—X—X—	CAPILLARY TUBE
— . . . —	ELECTROMAGNETIC OR SONIC SIGNAL (GUIDED)
. ~ ~ ~ ~ .	ELECTROMAGNETIC OR SONIC SIGNAL (NOT GUIDED)
– — — — —	INTERNAL SYSTEM LINK (SOFTWARE OR DATA LINK)
— — — —	MECHANICAL LINK
– — — — —	FOUNDATION FIELDBUS
– —— —— ——	PNEUMATIC BINARY SIGNAL
— – – – – ——	ELECTRIC BINARY SIGNAL

STANDARD ABBREVIATIONS

TABLE 1 - INSTRUMENT IDENTIFICATION

INSTRUMENT OR DEVICE IDENTIFIERS

AE	ANALYSIS ELEMENT
AIT	ANALYSIS INDICATING TRANSMITTER (ANALYTIC INST.)
AK	ANALYSIS (SAMPLER) CONTROL STATION
ASH	ANALYSIS SWITCH - HIGH
ASHH	ANALYSIS SWITCH - HIGH-HIGH
AT	ANALYSIS TRANSMITTER (ANALYTIC INST.)
DE	DENSITY ELEMENT
DT	DENSITY TRANSMITTER
EE	VOLTAGE ELEMENT/TRANSFORMER
EI	VOLTAGE INDICATOR
ET	VOLTAGE TRANSMITTER
FE	FLOW ELEMENT
FG	FLOW METER ULTRASONIC GENERATOR
FI	FLOW INDICATOR
FIC	FLOW INDICATING CONTROLLER
FIT	FLOW INDICATING TRANSMITTER
FQI	FLOW TOTALIZING INDICATOR
FQY	FLOW TOTALIZING / INTEGRATING RELAY
FSH	FLOW SWITCH HIGH
FSL	FLOW SWITCH LOW
FT	FLOW TRANSMITTER
HK	HAND CONTROL STATION
HS	HAND SWITCH
IS	CURRENT SWITCH
IE	CURRENT ELEMENT/TRANSFORMER
II	CURRENT INDICATOR
IY	CURRENT RELAY
IT	CURRENT TRANSMITTER
KY	TIMER RELAY
LE	LEVEL ELEMENT
LI	LEVEL INDICATOR
LIC	LEVEL INDICATING CONTROLLER
LIT	LEVEL INDICATING TRANSMITTER
LSL	LEVEL SWITCH LOW
LSH	LEVEL SWITCH HIGH
LSLL	LEVEL SWITCH LOW LOW
LSHH	LEVEL SWITCH HIGH HIGH
NS	MOISTURE SWITCH
PE	PRESSURE ELEMENT
PG	PRESSURE GAUGE
PI	PRESSURE INDICATOR
PIT	PRESSURE INDICATING TRANSMITTER
PS	PRESSURE SWITCH
PSH	PRESSURE SWITCH HIGH
PSHH	PRESSURE SWITCH HIGH HIGH
PSL	PRESSURE SWITCH LOW
PSLL	PRESSURE SWITCH LOW LOW
PT	PRESSURE TRANSMITTER
SC	SPEED CONTROLLER
SI	SPEED INDICATOR
TC	TEMPERATURE CONTROLLER
TE	TEMPERATURE ELEMENT
TG	TEMPERATURE GAUGE
TI	TEMPERATURE INDICATOR
TIT	TEMPERATURE INDICATING TRANSMITTER
TSH	TEMPERATURE SWITCH HIGH
TSHH	TEMPERATURE SWITCH HIGH HIGH
TSL	TEMPERATURE SWITCH LOW
TSLL	TEMPERATURE SWITCH LOW LOW
TT	TEMPERATURE TRANSMITTER
VE	VIBRATION ELEMENT
VT	VIBRATION TRANSMITTER
WE	WEIGHT ELEMENT
WIT	WEIGHT INDICATING TRANSMITTER
ZI	POSITION INDICATOR
ZS	POSITION SWITCH
ZSC	POSITION SWITCH CLOSED (LIMIT SWITCH)
ZSO	POSITION SWITCH OPEN (LIMIT SWITCH)
ZIT	POSITION INDICATING TRANSMITTER
ZT	POSITION TRANSMITTER

INSTRUMENT SIGNAL IDENTIFIERS

AAH	ANALYSIS ALARM - HIGH	DIGITAL INPUT
AAHH	ANALYSIS ALARM - HIGH-HIGH	DIGITAL INPUT
AI	ANALYTICAL INDICATION	ANALOG INPUT
AF	ANALYSIS (SAMPLER) FAIL	DIGITAL INPUT
AM	ANALYSIS (SAMPLER) ON/OFF	DIGITAL INPUT
AN	ANALYSIS (SAMPLER) START	DIGITAL OUTPUT
FAL	FLOW ALARM LOW	DIGITAL INPUT
FAH	FLOW ALARM HIGH	DIGITAL INPUT
FI	FLOW INDICATION	ANALOG INPUT
FF	FLOW RATE FAIL	DIGITAL INPUT
FQ	FLOW TOTALIZER	DIGITAL INPUT
LAH	LEVEL ALARM HIGH	DIGITAL INPUT
LAL	LEVEL ALARM LOW	DIGITAL INPUT
LC	LEVEL CONTROL (SETPOINT)	ANALOG OUTPUT
LDI	LEVEL DIFFERENTIAL INDICATION	DIGITAL INPUT
LF	LEVEL FAIL	DIGITAL INPUT
LI	LEVEL INDICATION	ANALOG INPUT
MF	MOTOR FAILURE	DIGITAL INPUT
MM	MOTOR RUN STATUS	DIGITAL INPUT
MMF	MOTOR RUN STATUS FORWARD	DIGITAL INPUT
MMR	MOTOR RUN STATUS REVERSE	DIGITAL INPUT
MN	MOTOR START/STOP	DIGITAL OUTPUT
MQ	MOTOR RUN HOURS	DIGITAL INPUT
MX	MOTOR UNCLASSIFIED (X = RESET)	DIGITAL INPUT
OAH	TORQUE ALARM HIGH	DIGITAL INPUT
PAH	PRESSURE ALARM HIGH	DIGITAL INPUT
PAL	PRESSURE ALARM LOW	DIGITAL INPUT
PI	PRESSURE INDICATION	ANALOG INPUT
QA	COMMON ALARM (OR TROUBLE)	DIGITAL INPUT
QF	COMMON FAIL ALARM	DIGITAL INPUT
SAL	MOTION ALARM LOW	DIGITAL INPUT
SC	SPEED CONTROL (SETPOINT)	ANALOG OUTPUT
SI	SPEED INDICATION	ANALOG INPUT
TAH	TEMPERATURE ALARM HIGH	DIGITAL INPUT
TI	TEMPERATURE INDICATION	ANALOG INPUT
UA	MULTIFUNCTION ALARM (GENERAL)	DIGITAL INPUT
VB	VALVE CLOSE (OR DECREASE)	DIGITAL \ MODULATING OUTPUT
VD	VALVE OPEN (OR INCREASE)	DIGITAL \ MODULATING OUTPUT
WI	WEIGHT INDICATION	ANALOG INPUT
XA	UNCLASSIFIED ALARM (X = FIRE)	DIGITAL INPUT
XI	UNCLASSIFIED INDICATION	ANALOG INPUT
YK	COMPUTER / LOCAL STATION	DIGITAL INPUT
YM	COMPUTER OPERATIONAL	DIGITAL INPUT
YN/XS	ESD ACTIVATED	DIGITAL INPUT
YS	COMPUTER STATUS (AUTO)	DIGITAL INPUT
YX	COMPUTER UNCLASSIFIED (STATUS ON)	DIGITAL INPUT
ZB	POSITION CLOSED (LIMIT SWITCH)	DIGITAL INPUT
ZC	POSITION CONTROL (SETPOINT)	ANALOG OUTPUT
ZD	POSITION OPEN (LIMIT SWITCH)	DIGITAL INPUT
ZI	POSITION INDICATION	ANALOG INPUT
ZL	POSITION LOW (BELT TENSION)	DIGITAL INPUT
ZN	POSITION OPEN/CLOSE COMMAND	DIGITAL OUTPUT
ZSC	CLOSED STATUS	DIGITAL INPUT
ZSM	MIDDLE STATUS	DIGITAL INPUT
ZSO	OPENED STATUS	DIGITAL INPUT

TABLE 2 - OPERATING FUNCTIONS

ANALYTICAL FUNCTIONS

CH4	METHANE
Cl2	CHLORINE
CO	CARBON MONOXIDE
COMB	COMBUSTIBLE GAS
DO	DISSOLVED OXYGEN
HC	HYDROCARBONS
H2S	HYDROGEN SULFIDE
HUM	HUMIDITY
LEL	LOWER EXPLOSIVE LIMIT
MLSS	MIXED LIQUOR SUSPENDED SOLIDS
NH4	AMMONIA GAS
NO	NITRIC OXIDE
NO2	NITROGEN DIOXIDE
NO3	NITRATE
O2	OXYGEN
ORP	OXIDATION REDUCTION POTENTIAL
OUR	OXYGEN UPTAKE RATE
pH	pH
P	PHOSPHORUS
SO2	SULPHUR DIOXIDE
SS	SUSPENDED SOLIDS (DENSITY)
TSS	TOTAL SUSPENDED SOLIDS
TURB	TURBITY
VIB	VIBRATION

SWITCHING FUNCTIONS

ACK	ACKNOWLEDGE (ALARM)
ALOH	AUTO-LOCAL-OFF-HAND
A/M	AUTO/MANUAL
CLS	CLOSE
COB	COMPUTER-OFF-BYPASS
COH	COMPUTER-OFF-HAND
ESD	EMERGENCY SHUTDOWN DEVICE
F/S	FAST-SLOW SELECTION
FOR	FORWARD-OFF-REVERSE
FWD	FORWARD SELECTION
HA	HAND-AUTO SELECTION
HOA	HAND-OFF-AUTO SELECTION
L/L	LEAD-LAG SELECTION
LOR	LOCAL-OFF-REMOTE
LOS	LOCK-OFF-STOP
L/R	LOCAL-REMOTE SELECTION
M/A	MANUAL-AUTO SELECTION
MAN	MANUAL REG.
O/C	OPEN/CLOSE
O/O	ON-OFF SELECTION
OCA	OPEN-CLOSE-AUTO SELECTION
OPN	OPEN
OSC	OPEN-STOP-CLOSE SELECTION
OVR	INTERLOCK OVERRIDE SWITCH
P/M	POSITIONER/MANUAL
P/R	PANEL/REMOTE
POT	POTENTIOMETER
R/B	RUN/BYPASS
R/L	RAISE-LOWER
REV	REVERSE SELECTION
RST	RESET
SEL	SELECTOR SWITCH
S/S	START-STOP
SP	SET POINT

GENERAL

AI	ANALOG INPUT	LEAK	LEAKAGE
AO	ANALOG OUTPUT	LCP	LOCAL CONTROL PANEL
CCTV	CLOSED CIRCUIT TELEVISION	MCC	MOTOR CONTROL CENTRE
DB	DEVICE BUS	OBD	OUTBOARD BEARING
DCS	DISTRIBUTED CONTROL SYSTEM	O/L	OVERLOAD
DI	DIGITAL INPUT		
DO	DIGITAL OUTPUT	PLC	PROGRAMMABLE LOGIC CONTROLLER
D/P	DIFFERENTIAL PRESSURE	RTD	RESISTIVE TEMPERATURE DEVICE
FB	FIELDBUS	SOL	SOLENOID
HMI	HUMAN MACHINE INTERFACE	T/C	THERMOCOUPLE
		TOR	TORQUE
I/I	CURRENT TO CURRENT		
I/O	INPUT/OUTPUT	WDG	WINDING
I/P	CURRENT TO PRESSURE		
IBD	INBOARD BEARING		

INSTRUMENT & FUNCTION SYMBOLS

DISCRETE INSTRUMENTS
FIELD OR LOCALLY MOUNTED
NOT PANEL OR CABINET MOUNTED
NORMALLY ACCESSIBLE TO AN OPERATOR

DISCRETE INSTRUMENTS
SHARING COMMON HOUSING

DISCRETE INSTRUMENTS
SECONDARY OR LOCAL CONTROL ROOM
FIELD OR LOCAL CONTROL PANEL MOUNTED
NORMALLY ACCESSIBLE TO AN OPERATOR

DISCRETE INSTRUMENTS
CENTRAL OR MAIN CONTROL ROOM
FRONT OF MAIN PANEL MOUNTED
NORMALLY ACCESSIBLE TO AN OPERATOR

ANNUNCIATOR POINT
FIELD OR LOCALLY MOUNTED
NOT PANEL OR CABINET MOUNTED
NORMALLY ACCESSIBLE TO AN OPERATOR

ANNUNCIATOR POINT
FIELD OR LOCAL CONTROL PANEL
PANEL MOUNTED
NORMALLY ACCESSIBLE TO AN OPERATOR

ANNUNCIATOR POINT
CENTRAL OR MAIN CONTROL ROOM
MAIN PANEL MOUNTED
NORMALLY ACCESSIBLE TO AN OPERATOR

CDACS (COMPUTER DATA ACQUISITION & CONTROL SYSTEM)
INPUT, OUTPUT, OR FUNCTION
ACCESSIBLE
EG. DCS OR SCADA

SHARED DISPLAY OR CONTROL
DEDICATED SINGLE FUNCTION DEVICE
FIELD OR LOCALLY MOUNTED
NORMALLY ACCESSIBLE TO THE OPERATOR AT DEVICE

SHARED DISPLAY OR CONTROL
SECONDARY OR LOCAL CONSOLE
FIELD OR LOCAL CONTROL PANEL
VISIBLE ON VIDEO DISPLAY
NORMALLY ACCESSIBLE TO AN OPERATOR AT CONSOLE

SHARED DISPLAY OR CONTROL
CENTRAL OR MAIN CONSOLE
VISIBLE ON VIDEO DISPLAY
NORMALLY ACCESSIBLE TO AN OPERATOR AT CONSOLE

PROGRAMMABLE LOGIC CONTROL
FIELD OR LOCALLY MOUNTED
NOT PANEL OR CABINET MOUNTED
NORMALLY ACCESSIBLE TO AN OPERATOR AT DEVICE

PROGRAMMABLE LOGIC CONTROL
SECONDARY OR LOCAL CONSOLE
FIELD OR LOCAL CONTROL PANEL
VISIBLE ON VIDEO DISPLAY
ACCESSIBLE TO AN OPERATOR AT CONSOLE

PROGRAMMABLE LOGIC CONTROL
CENTRAL OR MAIN CONSOLE
VISIBLE ON VIDEO DISPLAY
NORMALLY ACCESSIBLE TO AN OPERATOR AT CONSOLE

COMPUTER FUNCTIONS
FIELD OR LOCALLY MOUNTED

COMPUTER FUNCTIONS
SECONDARY OR LOCAL COMPUTER
VISIBLE ON VIDEO DISPLAY
NORMALLY ACCESSIBLE TO AN OPERATOR AT TERMINAL

COMPUTER FUNCTIONS
CENTRAL OR MAIN COMPUTER
VISIBLE ON VIDEO DISPLAY
NORMALLY ACCESSIBLE TO AN OPERATOR AT TERMINAL

COMMUNICATION INTERFACE
COMMUNICATES TO AN ADDRESSABLE DEVICE
(i.e. DB=DEVICEBUS, MB=MODBUS, E=ETHERNET
IY=CURRENT-FIELDBUS, FB=FIELDBUS, PB=PROFIBUS)

NOTE: INSTRUMENTS & DEVICES NOT NORMALLY ACCESSIBLE TO THE OPERATOR OR BEHIND-THE-PANEL DEVICES OR FUNCTIONS MAY BE DEPICTED BY USING THE SAME SYMBOLS BUT WITH DASHED HORIZONTAL BARS, I.E. :

MISCELLANEOUS SYMBOLS

INTERLOCK
REFER TO CONTROL
DESCRIPTION STRATEGY

RESET FOR LATCH-TYPE
OPERATOR

PURGE CONNECTION
OR FLUSHING DEVICE

VFD — VARIABLE FREQUENCY DRIVE

VSD — VARIABLE SPEED DRIVE

ANNUNCIATOR HORN

PRIMARY ELEMENT SYMBOLS

ANNUBAR

CORIOLIS MASS FLOWMETER

DENSITY METER

DIAPHRAGM SEAL

FLOW ELEMENT INTEGRAL WITH TRANSMITTER (MASS FLOW, ETC.)

IN-LINE CAPACITANCE FLOW ELEMENT

ANNULAR PRESSURE ISOLATOR

MAGNETIC FLOW METER

PITOT TUBE

POSITIVE DISPLACEMENT METER

PROPELLER OR TURBINE METER

SONIC FLOW METER (DOPPLER OR TRANSIT TIME)

THERMAL MASS FLOW ELEMENT

ROTAMETER

VORTEX FLOW SENSOR

FLOAT LEVEL ELEMENT

DISPLACEMENT LEVEL ELEMENT

BUBBLER LEVEL TUBE

UNGUIDED WAVE ULTRASONIC / MICROWAVE LEVEL ELEMENT

GUIDED WAVE RADIO FREQUENCY LEVEL ELEMENT

CAPACITANCE / POINT LEVEL ELEMENT

VIBRATING TUNING FORK LEVEL SWITCH

THERMAL SENSING RTD STRIP

THERMAL ELEMENT WITH WELL

INSTRUMENT FIELD DEVICE IDENTIFICATION

FIELD DEVICE NAMING CONVENTION

POSITION: N - 999 - ABCD - 1234 - X

- PLANT CODE (OPTIONAL)
- PROCESS AREA
- ALPHA SUFFIX
- LOOP OR DEVICE NUMBER
- INSTRUMENT IDENTIFICATION CODE - UP TO FOUR CHARACTERS - REFER TO TABLE 1

NOTE: HYPHENS ARE OPTIONAL

FIELD DEVICE IDENTIFICATION

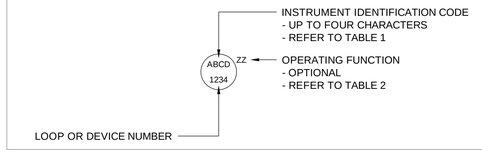

POINT TAG NAMING CONVENTION

POINT NAMING CONVENTION

POSITION: N - 999 - ABCD - 1234 - X

- PLANT CODE (OPTIONAL)
- PROCESS AREA
- ALPHA SUFFIX
- LOOP OR DEVICE NUMBER
- FUNCTIONAL IDENTIFICATION CODE OR INTERNAL FUNCTIONAL CODE - UP TO FOUR CHARACTERS - REFER TO TABLE 1

NOTE: HYPHENS ARE OPTIONAL

POINT IDENTIFICATION

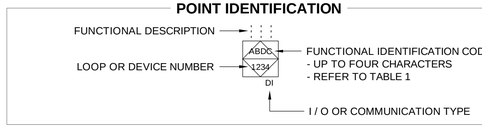

This drawing has been prepared for the use of AECOM's client and may not be used, reproduced or relied upon by third parties, except as agreed by AECOM and its client, as required by law or as seen by governmental reviewing agencies. AECOM accepts no responsibility, and denies any liability whatsoever, to any party that modifies this drawing without AECOM's express written consent. Do not scale this document. All measurements must be obtained from stated dimensions.

AECOM

PROJECT

City of Brandon
Kirkcaldy Lift Station

CLIENT

City of Brandon
Brandon, Manitoba

City of BRANDON

CONSULTANT

AECOM
99 Commerce Drive
Winnipeg, Manitoba R3P 0Y7
204.477.5381 tel 204.284.2040 fax
www.aecom.com

REGISTRATION

PROVINCE OF MANITOBA
ORIGINAL SIGNED BY:
P.R. BARSALOU
2018 / 08 / 09
YR. MN. DAY
REGISTERED PROFESSIONAL ENGINEER

APEGM
Certificate of Authorization
AECOM Canada Ltd.
No. 4671 Date: 2018.12.14

ISSUE/REVISION

1	2018.12.14	ISSUED FOR CONSTRUCTION
0	2018.08.10	ISSUED FOR TENDER
I/R	DATE	DESCRIPTION

PROJECT NUMBER

60247924

SHEET TITLE

KIRKCALDY LIFT STATION
INSTRUMENTATION
LEGEND & ABBREVIATIONS

SHEET NUMBER

N-002

Project Management Initials: Designer: ____ Checked: ____ Approved: ____ ANSI D 864mm x 559mm

Last saved by: SCHWARZERM(2018-12-14) Last Plotted: 2018-12-14
Filename: P:\60247924\000-CAD\02-SHEETS\N\60247924-SHT-00-0000-N-0002.DWG

Printed on ___% Post-Consumer Recycled Content Paper

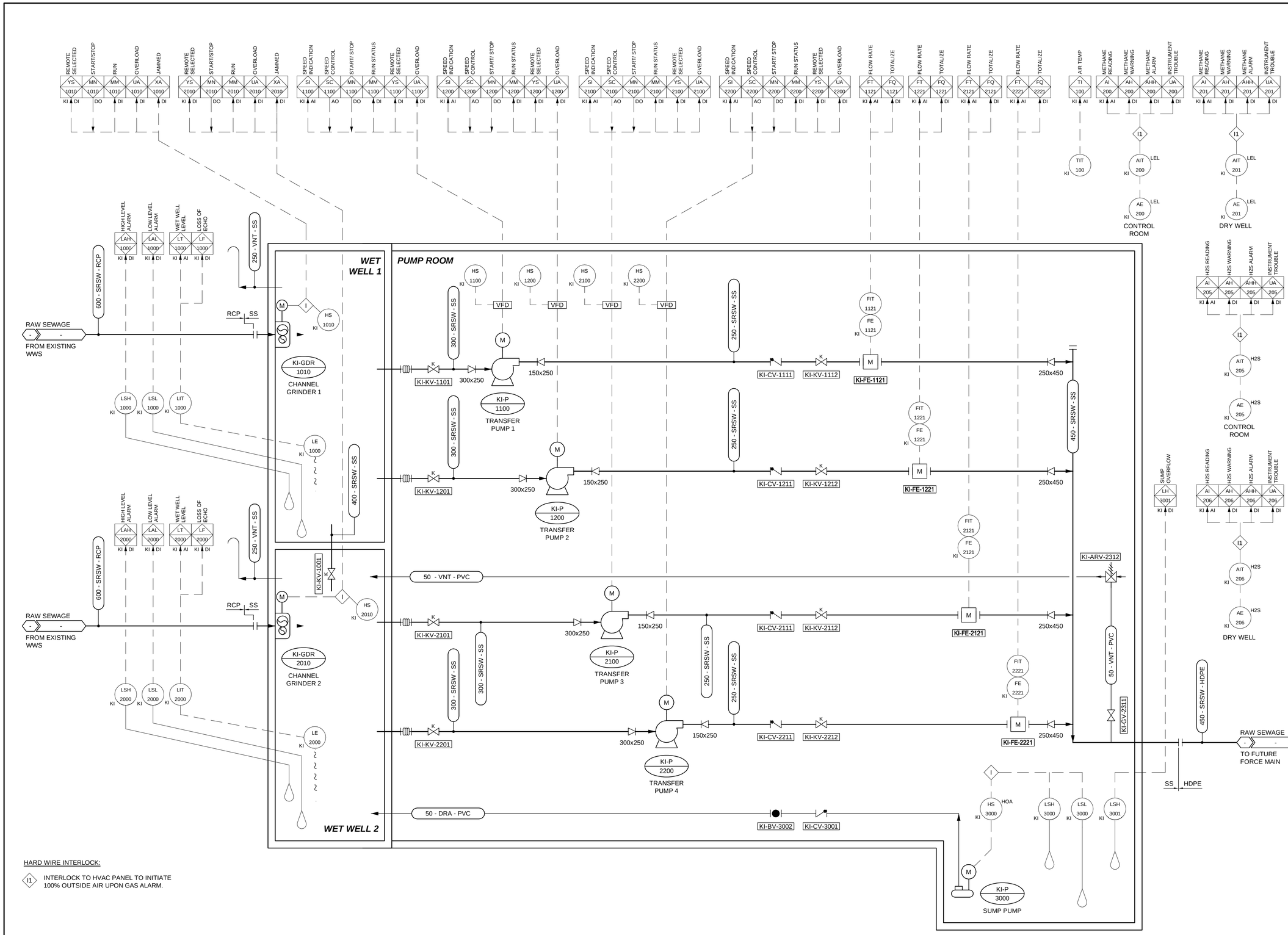

HARD WIRE INTERLOCK:

I1 INTERLOCK TO HVAC PANEL TO INITIATE 100% OUTSIDE AIR UPON GAS ALARM.

AECOM

PROJECT

City of Brandon
Kirkcaldy Lift Station

CLIENT

City of Brandon
Brandon, Manitoba

City of BRANDON

CONSULTANT

AECOM
99 Commerce Drive
Winnipeg, Manitoba R3P 0Y7
204.477.5381 tel 204.284.2040 fax
www.aecom.com

REGISTRATION

PROVINCE OF MANITOBA
ORIGINAL SIGNED BY:
P.R. BARSALOU
2018 / 08 / 09
YR. MN. DAY
REGISTERED PROFESSIONAL ENGINEER

APEGM
Certificate of Authorization
AECOM Canada Ltd.
No. 4671 Date: 2018.12.14

ISSUE/REVISION

I/R	DATE	DESCRIPTION
1	2018.12.14	ISSUED FOR CONSTRUCTION
0	2018.08.10	ISSUED FOR TENDER

PROJECT NUMBER

60247924

SHEET TITLE

KIRKCALDY LIFT STATION
PROCESS & INSTRUMENTATION
LIFT STATION DIAGRAM

SHEET NUMBER

N-003

This drawing has been prepared for the use of AECOM's client and may not be used, reproduced or relied upon by third parties, except as agreed by AECOM and its client, as required by law or for use by governmental reviewing agencies. AECOM accepts no responsibility, and denies any liability whatsoever, to any party that modifies this drawing without AECOM's express written consent. Do not scale this document. All measurements must be obtained from stated dimensions.

Project Management Initials: Designer: Checked: Approved: ANSI D 864mm x 559mm

Last saved by: SCHWARZERM(2018-12-14) Last Plotted: 2018-12-14
Filename: P:\60247924\000-CAD\02-SHEETS\N\60247924-SHT-00-0000-N-0003.DWG

Printed on ___% Post-Consumer Recycled Content Paper

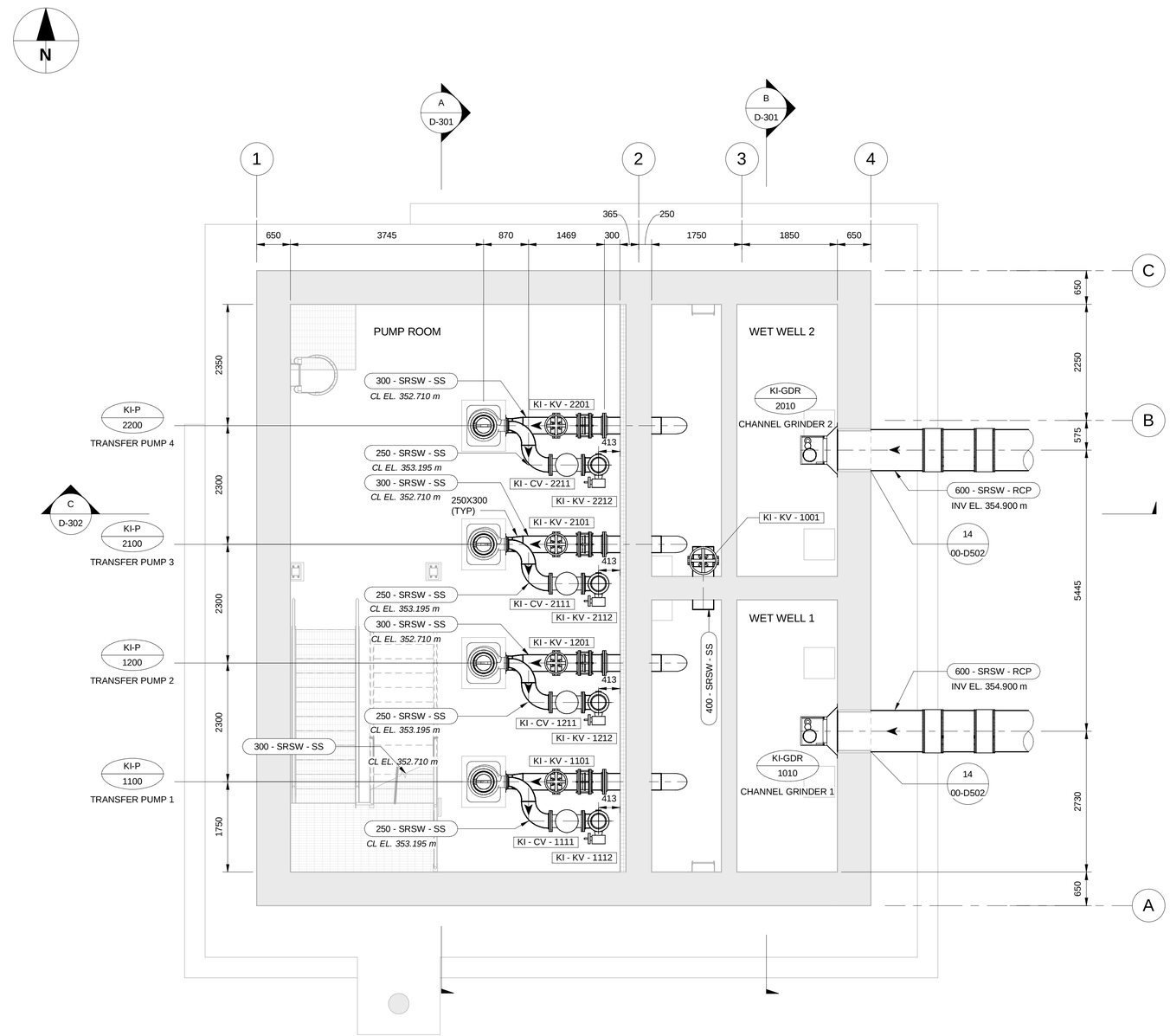

LOWER LEVEL PLAN

SCALE: 1 : 50

This drawing has been prepared for the use of AECOM's client and may not be used, reproduced or relied upon by third parties, except as agreed by AECOM and its client, as required by law or for use by governmental reviewing agencies. AECOM accepts no responsibility, and denies any liability whatsoever, to any party that modifies this drawing without AECOM's express written consent. Do not scale this document. All measurements must be obtained from the stated dimensions.

AECOM

PROJECT

City of Brandon
Kirkcaldy Lift Station

CLIENT

City of Brandon
Brandon, Manitoba

CONSULTANT

AECOM
99 Commerce Drive
Winnipeg, Manitoba R3P 0Y7
204.477.5381 tel 204.284.2040 fax
www.aecom.com

REGISTRATION

PROVINCE OF MANITOBA
ORIGINAL SIGNED BY:
P.R. BARSALOU
2018 / 8 / 9
YR. MN. DAY
REGISTERED PROFESSIONAL ENGINEER

APEGM
Certificate of Authorization
AECOM Canada Ltd.
No. 4671 Date: 2018.08.10

ISSUE/REVISION

I/R	DATE	DESCRIPTION
1	2018.12.14	ISSUED FOR CONSTRUCTION
0	2018.08.10	ISSUED FOR TENDER

PROJECT NUMBER

60247924

SHEET TITLE

KIRKCALDY LIFT STATION
PROCESS MECHANICAL
LOWER LEVEL PLAN

SHEET NUMBER

D-101

Project Management Initials:Designer: Designer Checked: Checker Approved: Approver ANSI D 559mm x 864mm
Last Plotted: 2018-12-14 10:00:10 AM
Filename: P:\60247924\000-CAD\01-MODELS\D\00-Design File_Marius Local Files\60247924-MOD-00-D_V17_Marius.Schwarzer@aecom.com.rvt
Printed on ___% Post-Consumer Recycled Content Paper

Project Management Initials:Designer: Designer Checked: Checker Approved: Approver ANSI D 559mm x 864mm
Last Plotted: 2018-12-14 10:00:15 AM
Filename: P:\60247924\000-CAD\01-MODELS\D\00-Design File_Marius Local Files\60247924-MOD-00-D_V17_Marius.Schwarzer@aecom.com.rvt
Printed on ___% Post-Consumer Recycled Content Paper

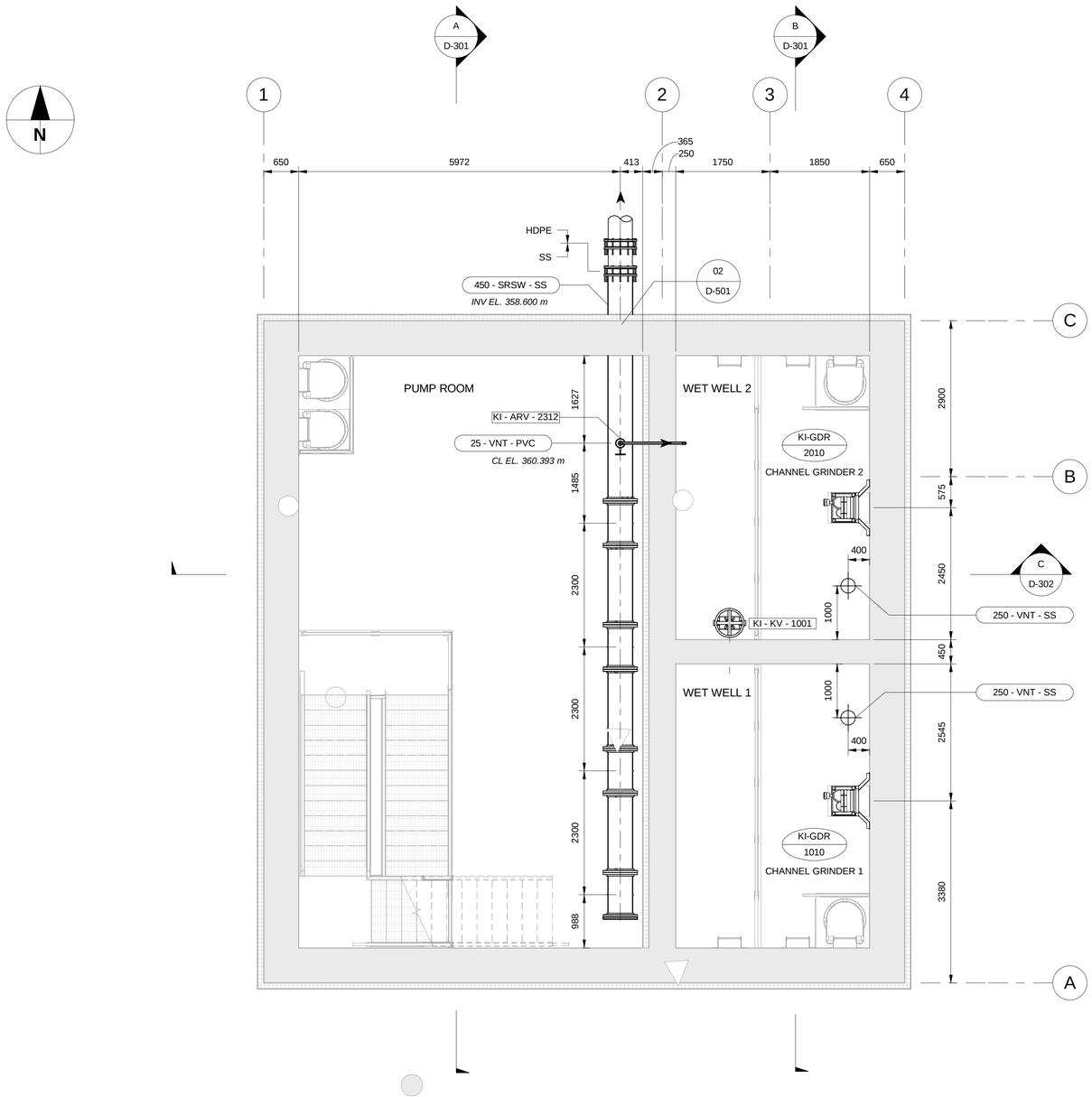

PLATFORM LEVEL PLAN

SCALE: 1 : 50

This drawing has been prepared for the use of AECOM's client and may not be used, reproduced or relied upon by third parties, except as agreed by AECOM and its client, as required by law or for use by governmental reviewing agencies. AECOM accepts no responsibility, and denies any liability whatsoever, to any party that modifies this drawing without AECOM's express written consent. Do not scale this document. All measurements must be obtained from the stated dimensions.

AECOM

PROJECT

City of Brandon
Kirkcaldy Lift Station

CLIENT

City of Brandon
Brandon, Manitoba

CONSULTANT

AECOM
99 Commerce Drive
Winnipeg, Manitoba R3P 0Y7
204.477.5381 tel 204.284.2040 fax
www.aecom.com

REGISTRATION

PROVINCE OF MANITOBA
ORIGINAL SIGNED BY:
P.R. BARSALOU
2018 / 8 / 9
YR. MN. DAY.
REGISTERED PROFESSIONAL ENGINEER

APEGM
Certificate of Authorization
AECOM Canada Ltd.
No. 4671 Date: 2018.08.10

ISSUE/REVISION

I/R	DATE	DESCRIPTION
1	2018.12.14	ISSUED FOR CONSTRUCTION
0	2018.08.30	ISSUED FOR ADDENDUM 2

PROJECT NUMBER

60247924

SHEET TITLE

KIRKCALDY LIFT STATION
PROCESS MECHANICAL
PLATFORM LEVEL PLAN

SHEET NUMBER

D-102

Project Management Initials:Designer: Designer Checked: Checker Approved: Approver ANSI D 559mm x 864mm

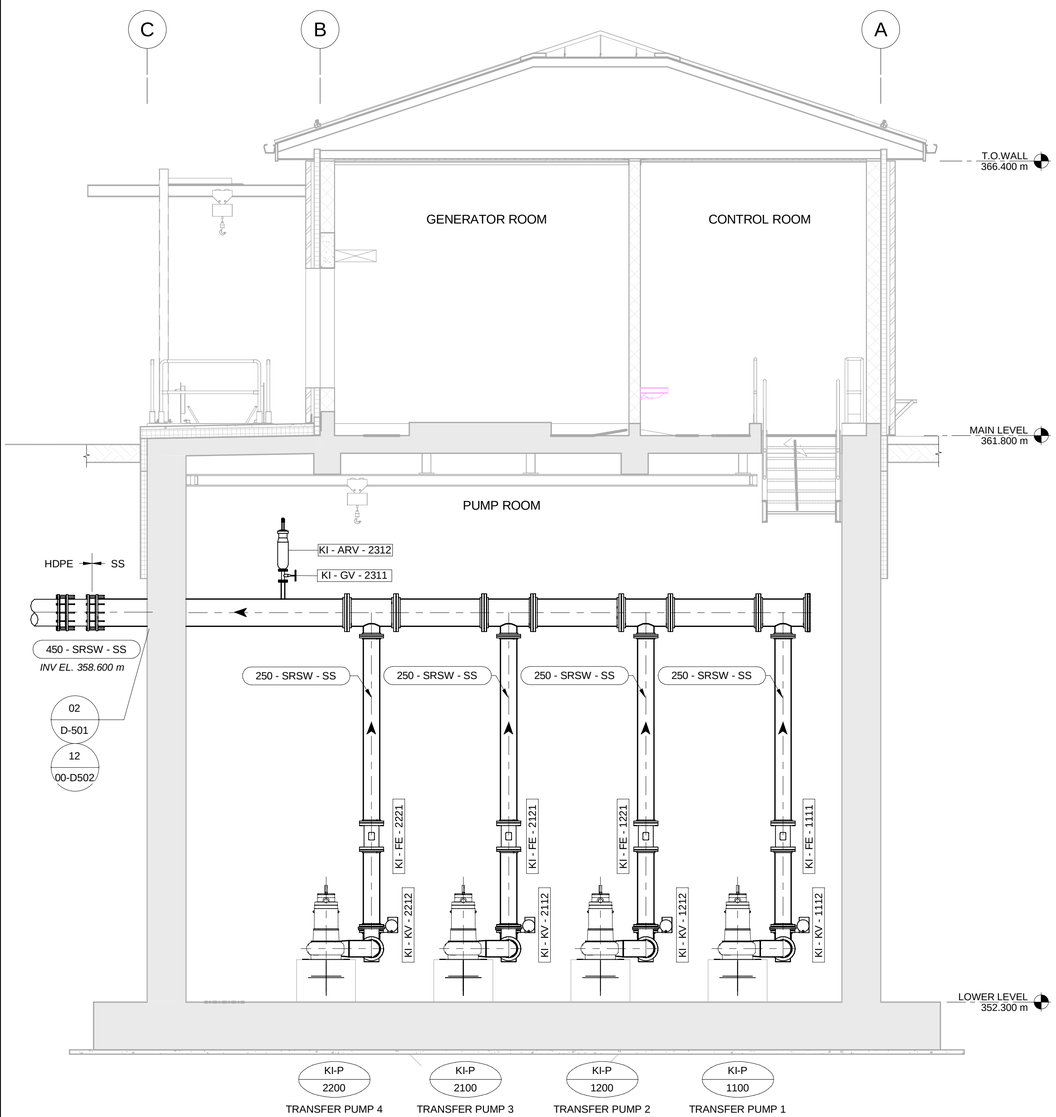

A | SECTION
D-101 | SCALE: 1 : 50

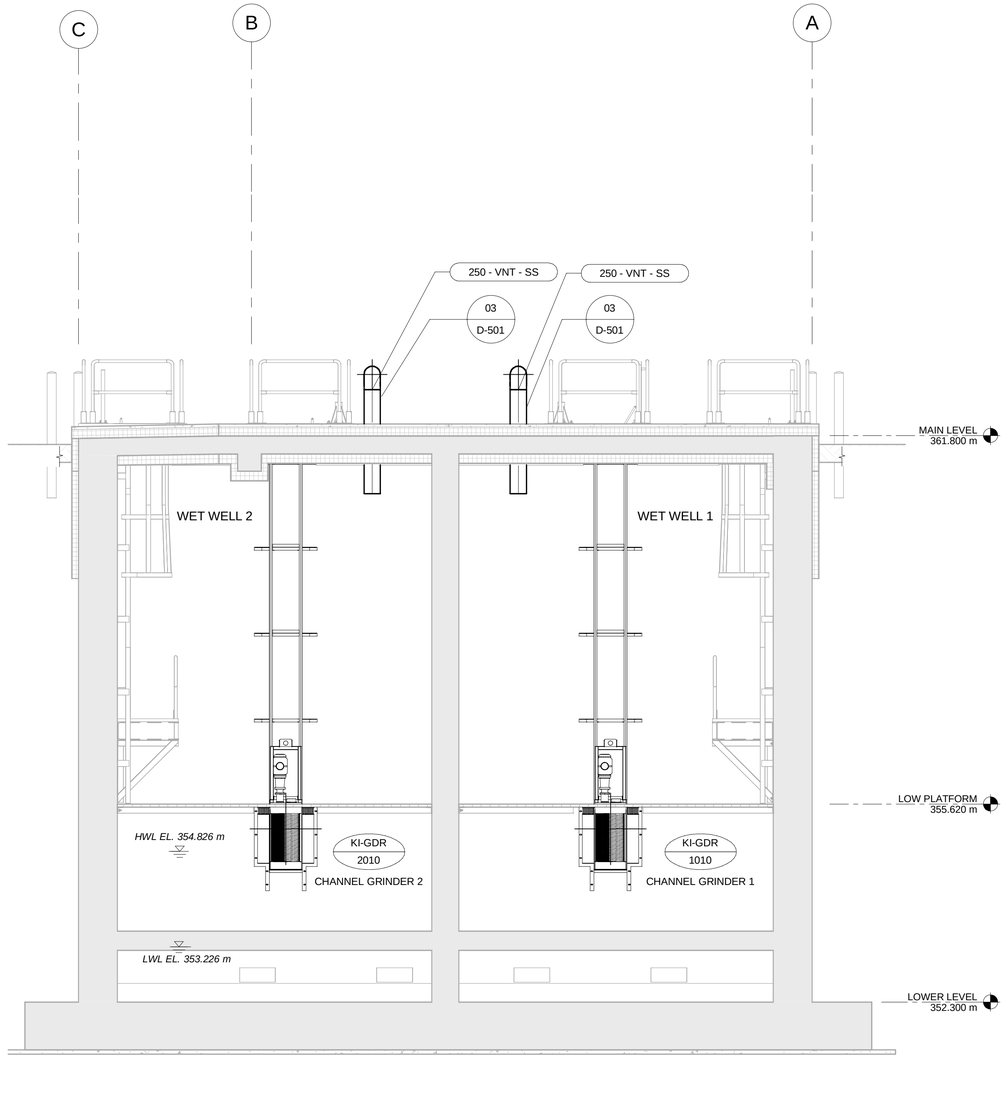

B | SECTION
D-101 | SCALE: 1 : 50

This drawing has been prepared for the use of AECOM's client and may not be used, reproduced or relied upon by third parties, except as agreed by AECOM and its client, as required by law or for use by governmental reviewing agencies. AECOM accepts no responsibility, and denies any liability whatsoever, to any party that modifies this drawing without AECOM's express written consent. Do not scale this document. All measurements must be obtained from the stated dimensions.

AECOM

PROJECT

City of Brandon
Kirkcaldy Lift Station

CLIENT

City of Brandon
Brandon, Manitoba

CONSULTANT

AECOM
99 Commerce Drive
Winnipeg, Manitoba R3P 0Y7
204.477.5381 tel 204.284.2040 fax
www.aecom.com

REGISTRATION

PROVINCE OF MANITOBA
ORIGINAL SIGNED BY:
P.R. BARSALOU
2018 / 8 / 9
YR MN DAY
REGISTERED PROFESSIONAL ENGINEER

APEGM
Certificate of Authorization
AECOM Canada Ltd.
No. 4671 Date: 2018.08.10

ISSUE/REVISION

1	2018.12.14	ISSUED FOR CONSTRUCTION
0	2018.08.30	ISSUED FOR ADDENDUM 2
I/R	DATE	DESCRIPTION

PROJECT NUMBER

60247924

SHEET TITLE

KIRKCALDY LIFT STATION
PROCESS MECHANICAL
SECTIONS

SHEET NUMBER

D-301

Last Plotted: 2018-12-14 10:00:18 AM
Filename: P:\60247924\000-CAD\01-MODELS\D\00-Design File_Marius Local Files\60247924-MOD-00-D_V17_Marius.Schwarzer@aecom.com.rvt

Printed on ___% Post-Consumer Recycled Content Paper

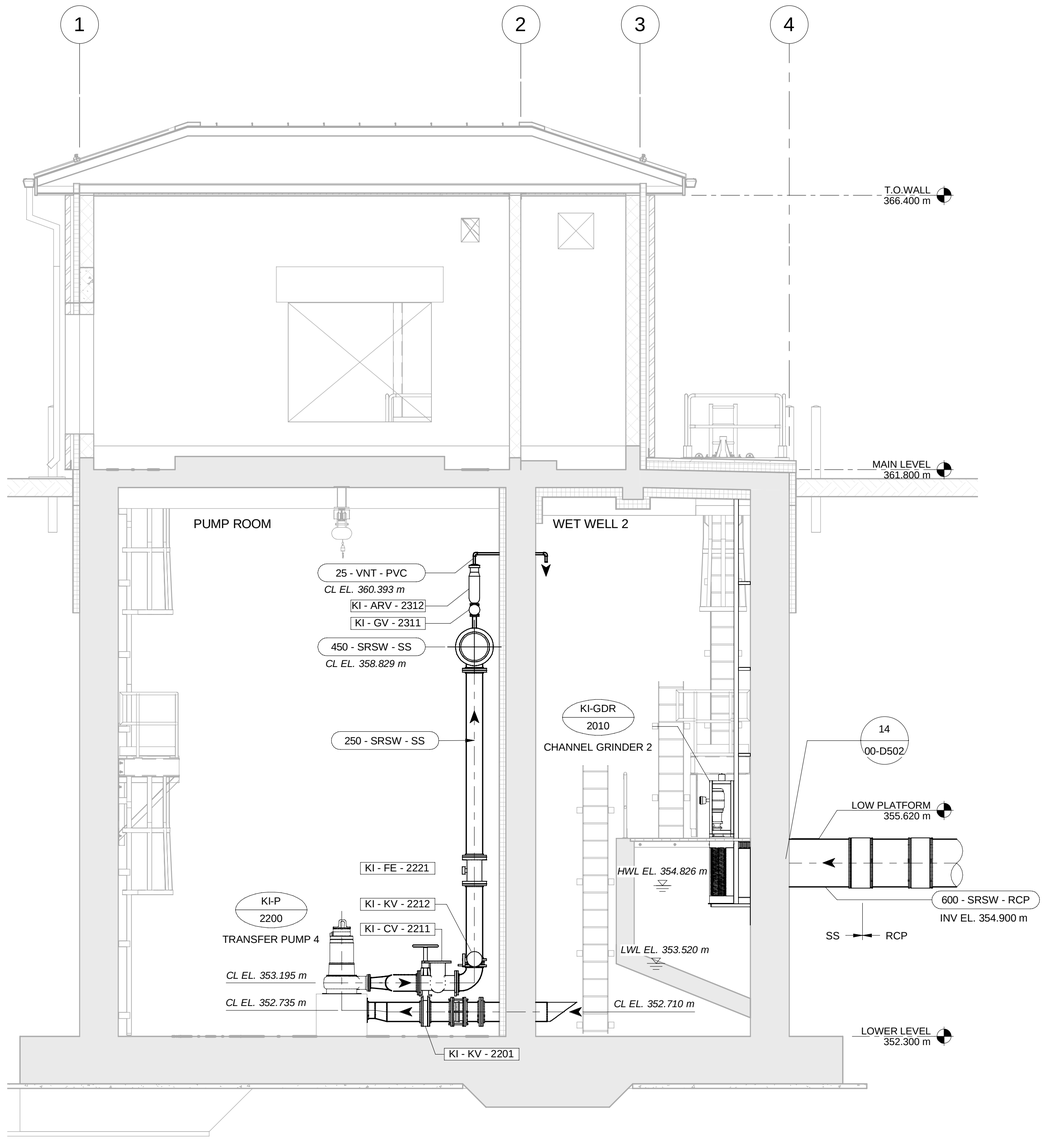

C | SECTION

D-101 | SCALE: 1 : 50

This drawing has been prepared for the use of AECOM's client and may not be used, reproduced or relied upon by third parties, except as agreed by AECOM and as required by law or for use by governmental reviewing agencies. AECOM accepts no responsibility, and denies any liability whatsoever, to any party that modifies this drawing without AECOM's express written consent. Do not scale this document. All measurements must be obtained from the stated dimensions.

AECOM

PROJECT

City of Brandon
Kirkcaldy Lift Station

CLIENT

City of Brandon
Brandon, Manitoba

CONSULTANT

AECOM
99 Commerce Drive
Winnipeg, Manitoba R3P 0Y7
204.477.5381 tel 204.284.2040 fax
www.aecom.com

REGISTRATION

PROVINCE OF MANITOBA
ORIGINAL SIGNED BY:
P.R. BARSALOU
2018 / 8 / 18
YR. MN. DAY.
REGISTERED PROFESSIONAL ENGINEER

APEGM
Certificate of Authorization
AECOM Canada Ltd.
No. 4671 Date: 2018.08.10

ISSUE/REVISION

I/R	DATE	DESCRIPTION
1	2018.12.14	ISSUED FOR CONSTRUCTION
0	2018.08.10	ISSUED FOR TENDER

PROJECT NUMBER

60247924

SHEET TITLE

KIRKCALDY LIFT STATION
PROCESS MECHANICAL
SECTION

SHEET NUMBER

D-302

Project Management Initials:Designer: Designer Checked: Checker Approved: Approver ANSI D 559mm x 864mm
Last Plotted: 2018-12-14 10:00:20 AM
Filename: P:\60247924\000-CAD\01-MODELS\D\00-Design File_Marius Local Files\60247924-MOD-00-D_V17_Marius.Schwarzer@aecom.com.rvt

Printed on ___% Post-Consumer Recycled Content Paper

Project Management Initials:Designer: Designer Checked: Checker Approved: Approver ANSI D 559mm x 864mm

Last Plotted: 2018-12-14 10:00:22 AM
Filename: P:\60247924\000-CAD\01-MODELS\D\00-Design File_Marius Local Files\60247924-MOD-00-D_V17_Marius.Schwarzer@aecom.com.rvt

Printed on ___% Post-Consumer Recycled Content Paper

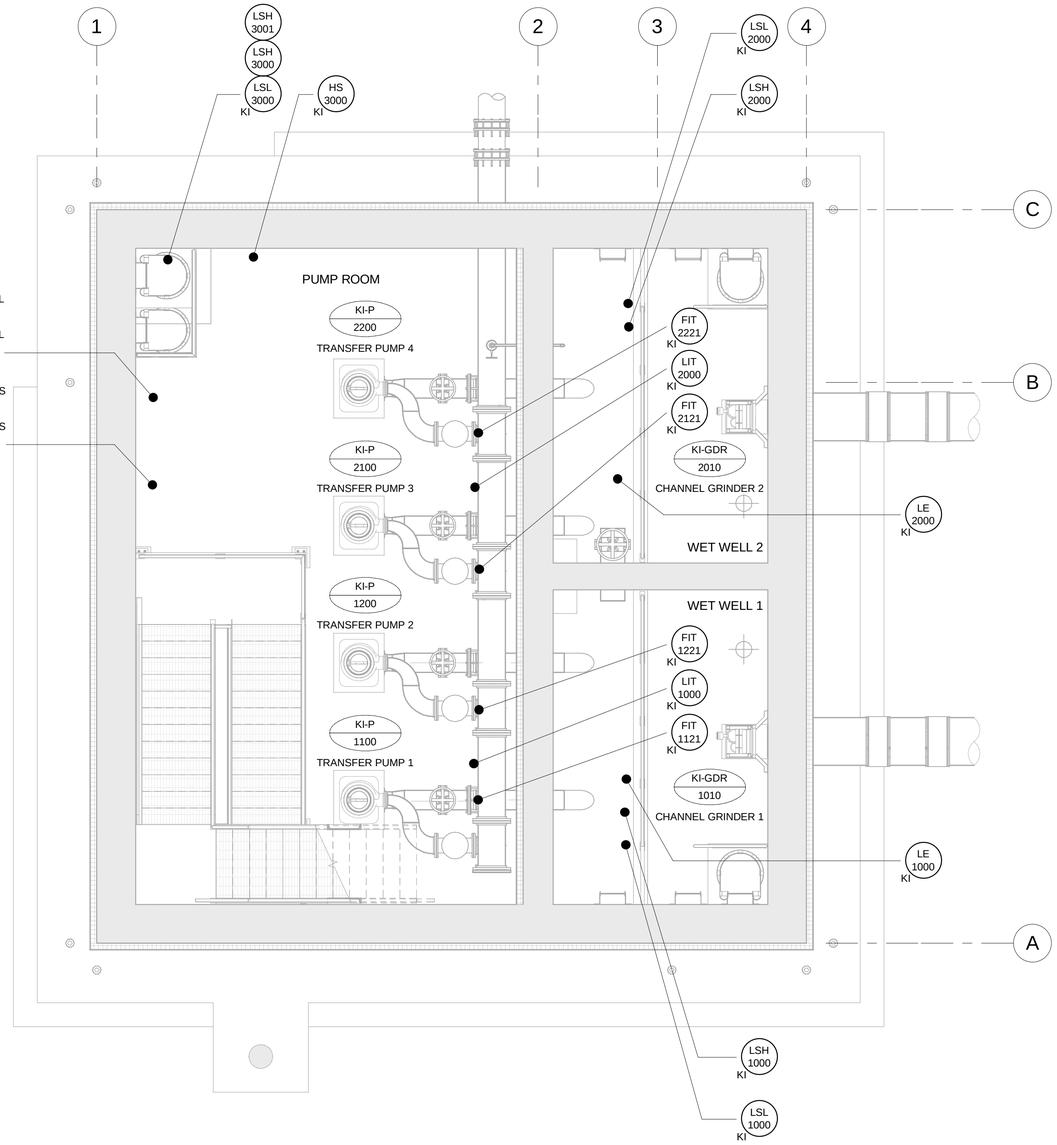

LOWER LEVEL PLAN

SCALE: 1 : 50

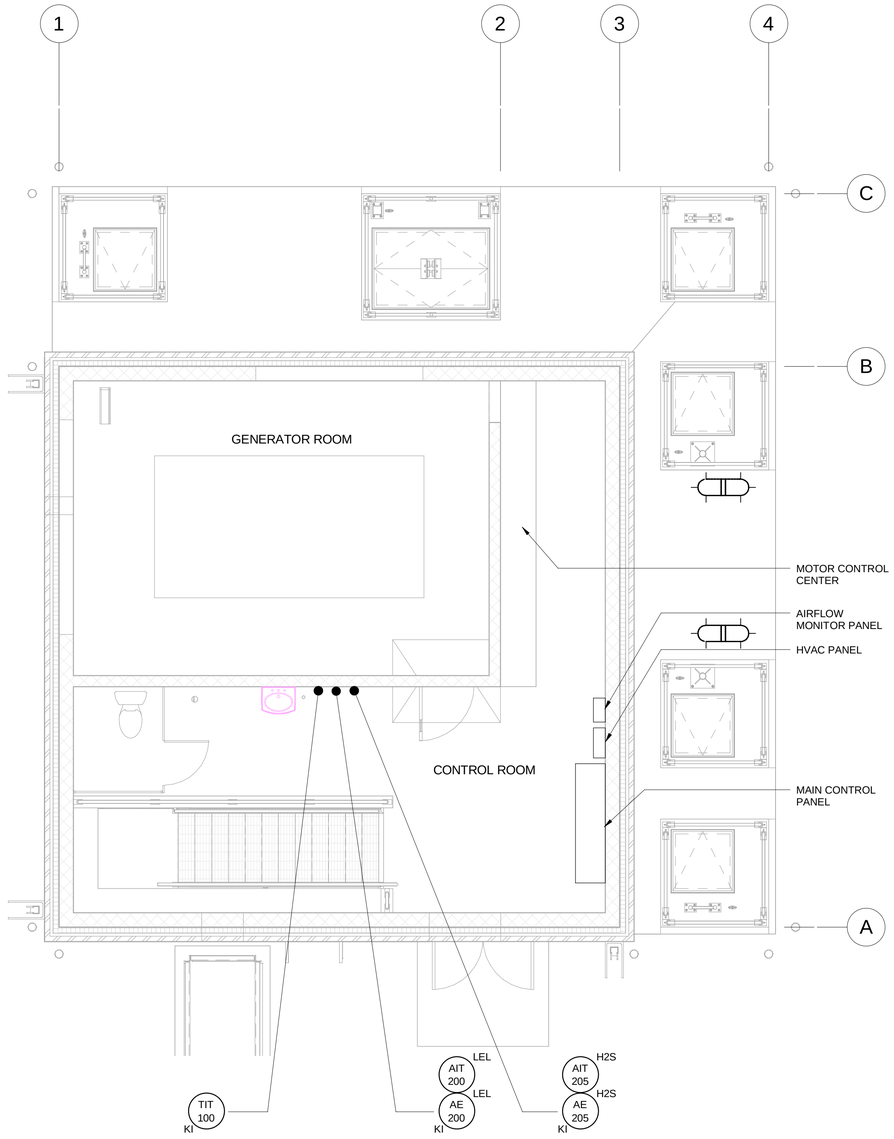

MAIN LEVEL PLAN

SCALE: 1 : 50

This drawing has been prepared for the use of AECOM's client and may not be used, reproduced or relied upon by third parties, except as agreed by AECOM and its client, as required by law or for use by governmental reviewing agencies. AECOM accepts no responsibility, and denies any liability whatsoever, to any party that modifies this drawing without AECOM's express written consent. Do not scale this document. All measurements must be obtained from the stated dimensions.

AECOM

PROJECT

City of Brandon
Kirkcaldy Lift Station

CLIENT

City of Brandon
Brandon, Manitoba

CONSULTANT

AECOM
99 Commerce Drive
Winnipeg, Manitoba R3P 0Y7
204.477.5381 tel 204.284.2040 fax
www.aecom.com

REGISTRATION

PROVINCE OF MANITOBA
ORIGINAL SIGNED BY:
P.R. BARSALOU
2018 / 8 / 9
YR. MN. DAY
REGISTERED PROFESSIONAL ENGINEER

APEGM
Certificate of Authorization
AECOM Canada Ltd.
No. 4671 Date: 2018.08.10

ISSUE/REVISION

1	2018.12.14	ISSUED FOR CONSTRUCTION
0	2018.08.10	ISSUED FOR TENDER
I/R	DATE	DESCRIPTION

PROJECT NUMBER

60247924

SHEET TITLE

KIRKCALDY LIFT STATION
INSTRUMENTATION
LOCATION PLAN

SHEET NUMBER

I-101

Project Management Initials: ____ Designer: ____ Checked: ____ Approved: ____ ANSI D 864mm x 559mm

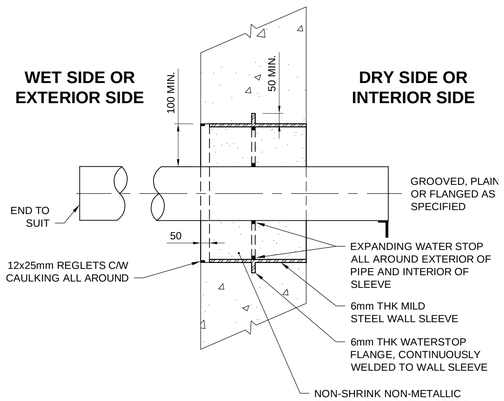

NOTES:

1. CONCRETE WALL
2. DUCTILE IRON, PVC, PIPE
3. CONDITION
   a) WET TO DRY
   b) WET TO WET
   c) INTERIOR TO EXTERIOR
4. NO TRANSVERSE MOVEMENT ALLOWED
5. LIQUID SIDE MUST PASS LEAKAGE TEST TO WHICH STRUCTURE IS SUBJECTED.
6. SAME DETAIL FOR VERTICAL OR HORIZONTAL WALL

1 | SLEEVE THRU CONCRETE
N.T.S.

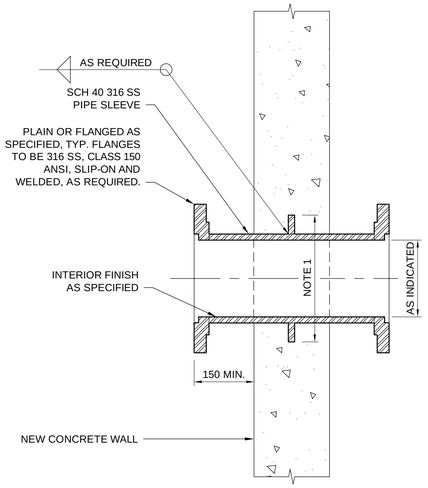

NOTE:

1. FOR PIPES 300Ø OR SMALLER, SLEEVE DIAMETER TO BE PIPE DIAMETER + 50mm. FOR PIPES LARGER THAN 300Ø, SLEEVE DIAMETER TO BE PIPE DIAMETER + 100mm.

2 | PUDDLE FLANGE SLEEVE
N.T.S.

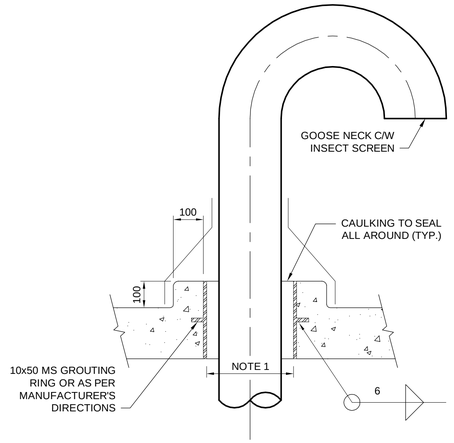

NOTE:

1. FOR PIPES 300Ø OR SMALLER, SLEEVE DIAMETER TO BE PIPE DIAMETER + 50mm. FOR PIPES LARGER THAN 300Ø, SLEEVE DIAMETER TO BE PIPE DIAMETER + 100mm.
2. SLEEVE TO THE FULL DEPTH OF THE CURB & SLAB

3 | GOOSE NECK AIR VENT
N.T.S.

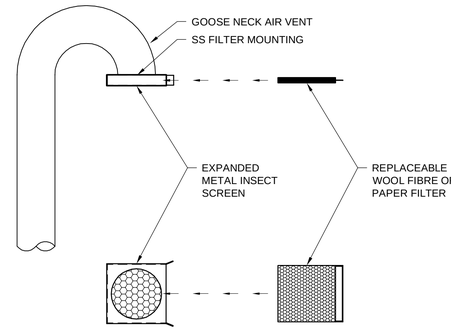

PLAN VIEWS

4 | AIR VENT FILTER & INSECT SCREEN
N.T.S.

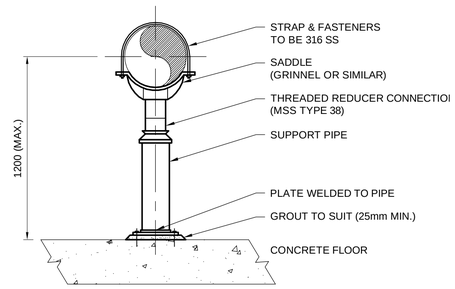

PIPE SIZE (mm)	SUPPORT PIPE (mm)	PLATE SIZE (mm)
50	38	150 X 150 X 9.5
75	50	250 X 250 X 9.5
100	75	250 X 250 X 9.5
150	100	250 X 250 X 9.5
200	150	250 X 250 X 9.5
250	200	300 X 300 X 9.5

5 | ADJUSTABLE PIPE SUPPORT
N.T.S.

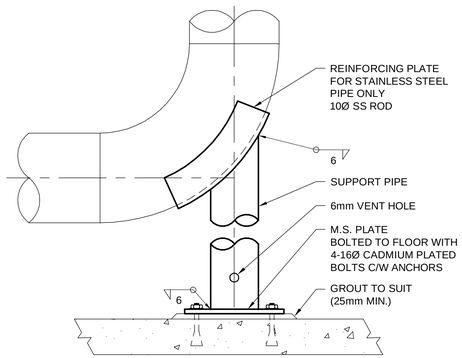

PIPE SIZE (mm)	SUPPORT PIPE (mm)	PLATE SIZE (mm)	MAXIMUM SUPPORT PIPE LENGTH (mm)
100	50 SCH 40	200 X 200 X 6	1525
150	50 SCH 40	200 X 200 X 6	1525
200	100 SCH 40	250 X 250 X 6	1625
250	100 SCH 40	250 X 250 X 6	1625
300	150 SCH 40	300 X 300 X 10	1830
350	200 SCH 40	350 X 350 X 10	1830
400	200 SCH 40	350 X 350 X 10	1830
500	200 SCH 40	350 X 350 X 10	1830
600	250 SCH 40	400 X 400 X 10	1830
750	300 SCH 40	450 X 450 X 10	1830
900	300 SCH 40	450 X 450 X 10	1830

6 | BASE ELBOW SUPPORT FOR STEEL PIPE
N.T.S.

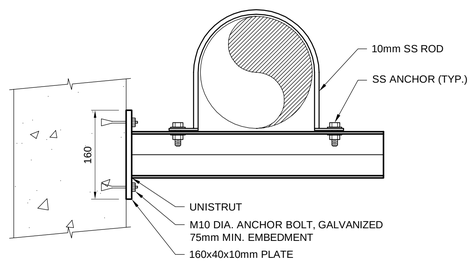

MAXIMUM LOAD OF BEAM LOADED @ CENTER (kg)	LENGTH OF SUPPORT L (mm)
440	760
740	450
1120	300

7 | WALL MOUNTED PIPE SUPPORT
N.T.S.

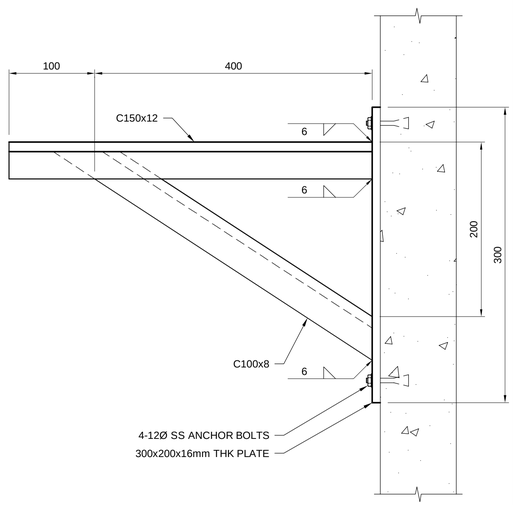

NOTE: GALVANIZE EXTERIOR STEEL SUPPORTS

8 | WALL MOUNTED PIPE SUPPORT
N.T.S.

This drawing has been prepared for the use of AECOM's client and may not be used, reproduced or relied upon by third parties, except as agreed by AECOM and its client, as required by law or for use by governmental reviewing agencies. AECOM accepts no responsibility, and denies any liability whatsoever, to any party that modifies this drawing without AECOM's express written consent. Do not scale this document. All measurements must be obtained from stated dimensions.

AECOM

PROJECT

City of Brandon
Kirkcaldy Lift Station

CLIENT

City of Brandon
Brandon, Manitoba

CONSULTANT

AECOM
99 Commerce Drive
Winnipeg, Manitoba R3P 0Y7
204.477.5381 tel 204.284.2040 fax
www.aecom.com

REGISTRATION

PROVINCE OF MANITOBA
ORIGINAL SIGNED BY:
P.R. BARSALOU
2018 / 08 / 09
YR. MN. DAY
REGISTERED PROFESSIONAL ENGINEER

APEGM
Certificate of Authorization
AECOM Canada Ltd.
No. 4671 Date: 2018.12.14

ISSUE/REVISION

I/R	DATE	DESCRIPTION
1	2018.12.14	ISSUED FOR CONSTRUCTION
0	2018.08.10	ISSUED FOR TENDER

PROJECT NUMBER

60247924

SHEET TITLE

KIRKCALDY LIFT STATION
PROCESS MECHANICAL
STANDARD DETAILS
1 OF 2

SHEET NUMBER

D-501

Last saved by: SCHWARZERM(2018-12-14) Last Plotted: 2018-12-14
Filename: P:\60247924\000-CAD\02-SHEETS\D\60247924-SHT-30-000N-D-5001.DWG
Printed on ___% Post-Consumer Recycled Content Paper

Project Management Initials: Designer: Checked: Approved: ANSI D 864mm x 559mm

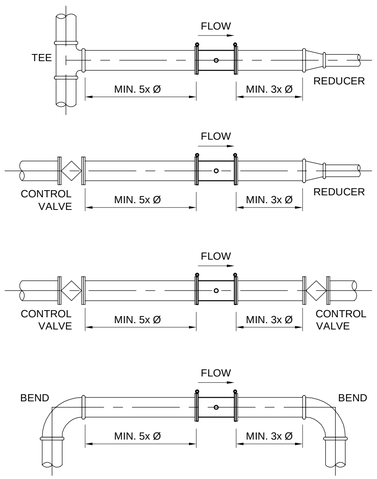

NOTES:

1. REFER TO THE MANUFACTURER'S INSTALLATION INSTRUCTIONS IN CONJUNCTION WITH THESE INSTALLATION RECOMMENDATIONS.
2. WHERE SPECIFIC INSTALLATION CONFLICTS ARISE THAT MIGHT PREVENT THESE INSTALLATION RECOMMENDATIONS FROM BEING COMPLIED WITH, CONSULT THE ENGINEER BEFORE PROCEEDING WITH THE INSTALLATION.
3. WHERE THE DRAWINGS INDICATE DIMENSIONS THAT DIFFER FROM THESE DETAILS, THE DRAWINGS SHALL TAKE PRIORITY.

9 | MAGNETIC FLOW METER INSTALLATION

N.T.S.

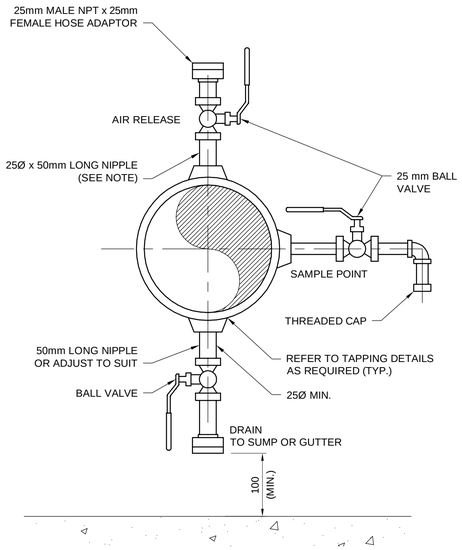

NOTE: WHEN SERVICE PIPE IS MORE THAN 1800 mm ABOVE FLOOR, DRAIN (AIR RELEASE) SHALL BE PIPED DOWN NEAREST WALL WITH A VALVE 1200 mm ABOVE FINISHED FLOOR.

10 | 25MM AIR RELEASE, SAMPLE & DRAIN CONNECTIONS

N.T.S.

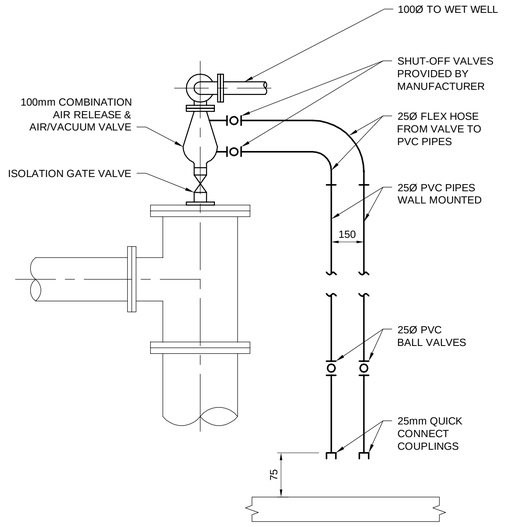

11 | AIR VALVE FLUSHING SYSTEM

N.T.S.

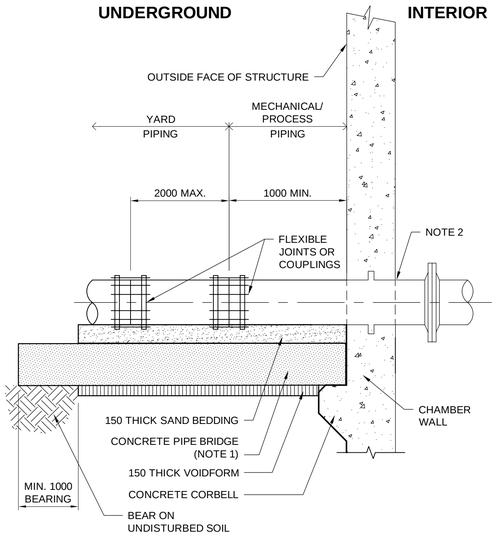

NOTES:

1. UNLESS NOTED OTHERWISE, REFER TO STRUCTURAL DRAWING S-301 FOR DETAILS.
2. REFER TO DETAILS FOR WALL PENETRATION REQUIREMENTS.

12 | SUPPORTED UNDERGROUND CONNECTION TO STRUCTURE

N.T.S.

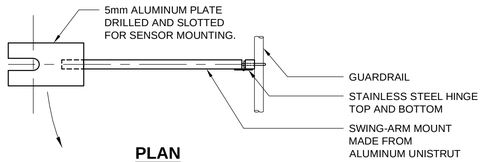

PLAN

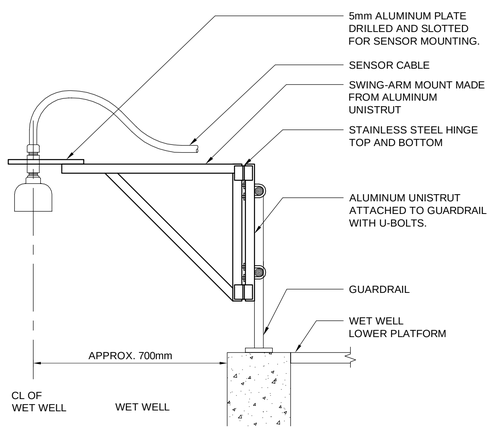

SECTION

NOTES:

1. ALL HARDWARE AND FASTENERS SHALL BE STAINLESS STEEL, UNLESS NOTED OTHERWISE.
2. FABRICATE BRACKET AND MOUNTING FROM ALUMINUM UNISTRUT.
3. INSTALL IN LOCATION THAT WILL NOT INTERFERE WITH THE SIGNAL (PROVIDE EXACT LOCATION IN SHOP DRAWING).

13 | ULTRASONIC LEVEL TRANSDUCER INSTALLATION

N.T.S.

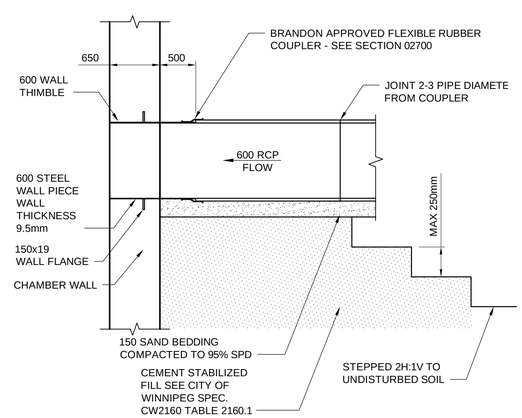

14 | 600mm Ø WALL CONNECTION

N.T.S.

This drawing has been prepared for the use of AECOM's client and may not be used, reproduced or relied upon by third parties, except as agreed by AECOM and its client, as required by law or for use by governmental reviewing agencies. AECOM accepts no responsibility, and denies any liability whatsoever, to any party that modifies this drawing without AECOM's express written consent. Do not scale this document. All measurements must be obtained from stated dimensions.

AECOM

PROJECT

City of Brandon
Kirkcaldy Lift Station

CLIENT

City of Brandon
Brandon, Manitoba

CONSULTANT

AECOM
99 Commerce Drive
Winnipeg, Manitoba R3P 0Y7
204.477.5381 tel 204.284.2040 fax
www.aecom.com

REGISTRATION

PROVINCE OF MANITOBA
ORIGINAL SIGNED BY:
P.R. BARSALOU
2018 / 08 / 09
YR. MN. DAY
REGISTERED PROFESSIONAL ENGINEER

APEGM
Certificate of Authorization
AECOM Canada Ltd.
No. 4671 Date: 2018.12.14

ISSUE/REVISION

I/R	DATE	DESCRIPTION
1	2018.12.14	ISSUED FOR CONSTRUCTION
0	2018.08.10	ISSUED FOR TENDER

PROJECT NUMBER

60247924

SHEET TITLE

KIRKCALDY LIFT STATION
PROCESS MECHANICAL
STANDARD DETAILS
2 OF 2

SHEET NUMBER

D-502

Last saved by: SCHWARZERM(2018-12-14) Last Plotted: 2018-12-14
Filename: P:\60247924\000-CAD\02-SHEETS\D\60247924-SHT-30-000N-D-5002.DWG

Printed on ___% Post-Consumer Recycled Content Paper

Project Management Initials:Designer: Designer Checked: Checker Approved: Approver: ANSI D 559mm x 864mm
Last Plotted: 12/14/2018 10:54:30 AM
Filename: P:\60247924\000-CAD\01-MODELS\MI\Design Files\60247924-MOD-00-M_V17_perez2.rvt
Printed on ___% Post-Consumer Recycled Content Paper

MECHANICAL DRAWING TAGS

KEY NOTE (##)

DIFFUSER / REGISTER TAG

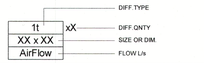

MOTORIZED EQUIPMENT TAG

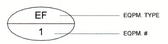

NON-MOTORIZED EQUIPMENT TAG



PLUMBING FIXTURE TAG



MECHANICAL DRAWING SYMBOLS

	BALANCING DAMPER
F	FIRE DAMPER
	EXHAUST DUCT UP
	EXHAUST DUCT DOWN
	ELBOW 90° MITERED / TURNING VANES
	ELBOW (MITERED)
	ELBOW (RADIUS)
	END CAP
	RETURN DUCT UP
	RETURN DUCT DOWN
	SUPPLY DUCT UP
	SUPPLY DUCT DOWN
	ROUND TAKE-OFF
	ROUND EXHAUST ELBOW DOWN
	ROUND SUPPLY ELBOW DOWN
	ROUND EXHAUST ELBOW UP
	ROUND SUPPLY ELBOW UP
	EXTERNAL DUCT INSULATION
	TRANSITION
	BAROMETRIC DAMPER

MECHANICAL ABBREVIATIONS

ABBREVIATION	DESCRIPTION
AC	AIR CONDITIONER
AHU	AIR HANDLING UNIT
BB	BASEBOARD HEATER
BD	BALANCING DAMPER
BFP	BACK FLOW PREVENTOR
BAR	BAROMETRIC
C	CONDENSATE
CO	CLEAN OUT
CU	CONDENSING UNIT
DCW	DOMESTIC COLD WATER
DHW	DOMESTIC HOT WATER
DHWR	DOMESTIC HOT WATER RETURN
EDH	ELECTRIC DUCT HEATER
EF	EXHAUST FAN
ET	EXPANSION TANK
F	FIRE DAMPER
FD	FLOOR DRAIN
FE	FIRE EXTINGUISHER
HB	HOSE BIBB
HR	HOSE REEL
IW	INDIRECT WASTE
LAV	LAVATORY
MAU	MAKE-UP AIR UNIT
RPZ	REDUCED PRESSURE ZONE
SAN	SANITARY
SF	SUPPLY FAN
SK	SINK
TP	TRAP PRIMER
UH	UNIT HEATER
V	SANITARY VENT
WM	WATER METER
WC	WATER CLOSET

FIRE PROTECTION EQUIPMENT

SYMBOL	DESCRIPTION
	FIRE EXTINGUISHER

VALVES AND PIPING SYMBOLS

SYMBOL	DESCRIPTION
	GATE VALVE (NORMALLY OPEN)
	GATE VALVE (NORMALLY CLOSED)
	PLUG VALVE (NORMALLY OPEN)
	PLUG VALVE (NORMALLY CLOSED)
	BALL VALVE (NORMALLY OPEN)
	BALL VALVE (NORMALLY CLOSED)
	BUTTERFLY VALVE
	GLOBE VALVE
	DOUBLE LEAF CHECK VALVE
	CHECK VALVE
RPZ	REDUCED PRESSURE ZONE PREVENTER
DC	DOUBLE CHECK VALVE BACKFLOW PREVENTER
	UNION
	FLANGE
	CONCENTRIC REDUCER
	ECCENTRIC REDUCER
	STRAINER
	CAP
AAV	AUTOMATIC AIR VENT
MAV	MANUAL AIR VENT
	PRESSURE GAUGE
	THERMOMETER W/ WELL

CONTROL SYMBOLS

SYMBOL	DESCRIPTION
T	THERMOSTAT
H	HUMIDISTAT
$	SWITCH
T	TEMPERATURE SENSOR
TT	TEMPERATURE TRANSMITTER
FZ	FREEZE STAT
	DISCONNECT SWITCH
M	MOTOR
M	ACTUATOR
AMS	AIR FLOW MONITOR STATION
PS	PRESSURE SENSOR
FS	FLOW SWITCH
LS	LIMIT SWITCH
SM	SMOKE DETECTOR
COMB	COMBUSTIBLE GAS DETECTOR
H_2S	HYDROGEN SULPHIDE DETECTOR
I	INTERLOCK
DENOTES NUMBER OF WIRES REQUIRED	THREE PHASE WIRING
	SINGLE PHASE WIRING BY DIVISION 16
	CONTROL WIRING BY DIVISION 15
	CONTROL WIRING (LOW VOLTAGE)
	CONTROL WIRING (LINE VOLTAGE)
LWCO	LOW WATER CUT OFF DEVICE

PLUMBING & DRAINAGE

SYMBOL	DESCRIPTION
FD-#	FLOOR DRAIN (TYPE)
NFHB	NON-FREEZE HOSE BIBB
HB	HOSE BIBB
CO	CLEANOUT (ABOVE GRADE)
CO	CLEANOUT (BELOW GRADE)
	P-TRAP
CO	RUNNING TRAP WITH CLEANOUT
	"T" CONNECTION
TPD	TRAP PRIMING DEVICE
	BACKWATER VALVE
	DIRECTION OF FLUID FLOW

PIPING IDENTIFICATION

SYMBOL	DESCRIPTION
DCW	DOMESTIC COLD WATER SUPPLY
DHW	DOMESTIC HOT WATER SUPPLY
DHR	DOMESTIC HOT WATER RECIRC.
PDL	PUMP DISCHARGE LINE
TW	TEMPERED WATER SUPPLY
S	SANITARY LINE (ABOVE GRADE)
S	SANITARY LINE (BURIED)
V	SANITARY VENT
	PIPE DROP
	PIPE RISE
	PIPE TEE DOWN
	PIPE TEE UP
	FLOW DIRECTION

INSTRUMENT AND FUNCTION SYMBOLS

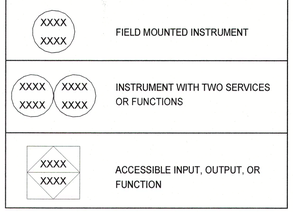

DIGITAL POINT TAG NAMING IDENTIFICATION

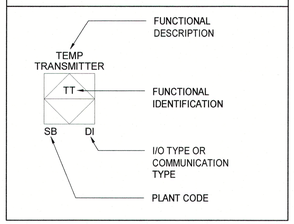

TYPICAL INSTRUMENT FIELD DEVICE IDENTIFICATION

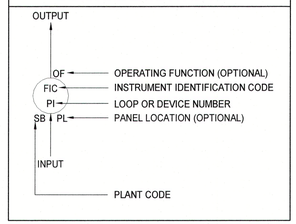

INSTRUMENT IDENTIFICATION TABLE

	FIRST LETTER		SUCCEEDING-LETTERS			DESCRIPTION
						I/O TYPES
LETTER	MEASURED OR INITIATING VARIABLE	MODIFIER	READOUT OR PASSIVE FUNCTION	OUTPUT FUNCTION	MODIFIER	TYPICAL ASSOCIATED CDACS
A	ANALYSIS		ALARM			DI
B	BURNER, COMBUSTION					DO
C	CONDUCTIVITY, pH (ACIDITY)		CLOSE	CONTROL OR CONTROLLER		DI/AO
D	DENSITY	DIFFERENTIAL				DO
E	VOLTAGE		SENSOR (PRIMARY ELEMENT)			
F	FLOW RATE	RATIO (FRACTION)				DI
G	USER CHOICE		GLASS, VIEWING DEVICE			
H	HAND				H-HIGH-(ALARM) HH-HIGH-(SHUTDOWN)	DI
I	CURRENT (ELECTRICAL)		INDICATE			AI
J	POWER	SCAN				DO/AI
K	TIME, TIME SCHEDULE	TIME RATE OF CHANGE		CONTROL STATION		DO/AO
L	LEVEL		LIGHT		L-LOW-(ALARM) LL-LOW-(SHUTDOWN)	DI
M	MOTOR				MIDDLE, INTERMEDIATE	DI
N			ON OR RUN			DO
O	UNCLASSIFIED		OPEN ORIFICE, RESTRICTION POINT (TEST) CONNECTION		OVERLOAD	DO
P	PRESSURE, VACUUM			PNEUMATIC		
Q	QUANTITY	INTEGRATE, TOTALIZE		INTEGRATE OR TOTALIZE		DI/AI
R	RADIATION		RECORD			AI
S	SPEED, FREQUENCY, SOLENOID	SAFETY		SWITCH, OR SAFETY		DI/DO
T	TEMPERATURE			TRANSMIT		AI
	TORQUE					
U	MULTIVARIABLE		MULTIFUNCTION	MULTIFUNCTION	MULTIFUNCTION	DI
V	VIBRATION, MECHANICAL ANALYSIS			VALVE, DAMPER LOUVER		
W	WEIGHT, FORCE		WELL			
X	UNCLASSIFIED	X AXIS	UNCLASSIFIED	UNCLASSIFIED	UNCLASSIFIED	DI/DO
Y	EVENT, STATE OR PRESENCE	Y AXIS		RELAY, COMPUTE CONVERT		
Z	POSITION, DIMENSION	Z AXIS		DRIVER, ACTUATOR, UNCLASSIFIED - FINAL CONTROL ELEMENT		

DIL DIRECT INTERLOCK TO START
AI ANALOG INPUT
AO ANALOG OUTPUT
DI DIGITAL INPUT
DO DIGITAL OUTPUT

NOTES:
(1) INSTRUMENT SYMBOLS AND IDENTIFICATION STANDARD, ISA-S5.1-1984

This drawing has been prepared for the use of AECOM's client and may not be used, reproduced or relied upon by third parties, except as agreed by AECOM and as required by law or for the governmental reviewing agencies. AECOM assumes no responsibility, and denies any liability whatsoever, to any party that modifies this drawing without AECOM's express written consent. Do not scale this document. All measurements must be obtained from the stated dimensions.

AECOM

PROJECT

City of Brandon
Kirkcaldy Lift Station

CLIENT

City of Brandon
Brandon, Manitoba

City of BRANDON

CONSULTANT

AECOM
99 Commerce Drive
Winnipeg, Manitoba R3P 0Y7
204.477.5381 tel 204.284.2040 fax
www.aecom.com

REGISTRATION

PROVINCE OF MANITOBA
B.C. WATSON
14/12/2018
REGISTERED PROFESSIONAL ENGINEER

APEGM
Certificate of Authorization
AECOM Canada Ltd.
No. 4671 Date: 2018.12.14

ISSUE/REVISION

I/R	DATE	DESCRIPTION
1	2018.12.14	ISSUED FOR CONSTRUCTION
0	2018.07.27	ISSUED FOR TENDER

PROJECT NUMBER

60247924

SHEET TITLE

KIRKCALDY LIFT STATION
MECHANICAL
LEGEND

SHEET NUMBER

GM001

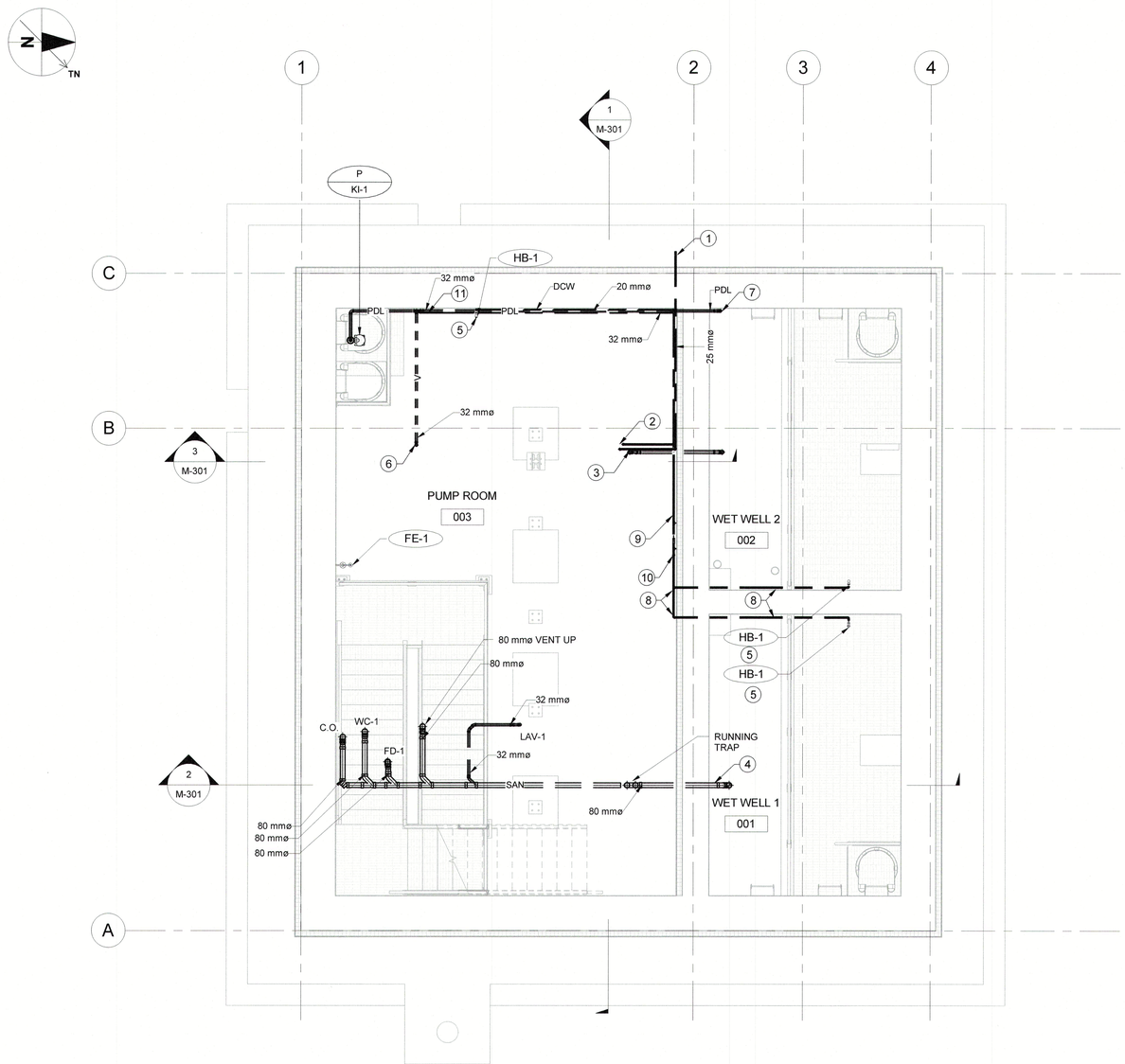

1 LOWER LEVEL- PLUMBING

M-301 SCALE: 1 : 50

GENERAL NOTES:

1. HANG SANITARY LINE AS CLOSE AS POSSIBLE TO UNDERSIDE OF STRUCTURE AND MAINTAIN A 1% SLOPE.

DRAWING NOTES:

1. 25ø DOMESTIC COLD WATER. CONNECT TO SITE SERVICES SEE DWG.C-001 FOR CONTINUATION.
2. 25ø DOMESTIC COLD WATER UP TO MAIN LEVEL.
3. 50ø SANITARY LINE UP TO MAIN LEVEL
4. 80ø SANITARY DISCHARGE INTO WETWELL.
5. PROVIDE BACKING FOR HB-1 SUPPORT.
6. 32ø SUMP PUMP VENT UP TO MAIN LEVEL.
7. 32ø SUMP PUMP DISCHARGE LINE TO WET WELL.
8. 20ø DOMESTIC COLD WATER LINE SLOPE BACK @2% GRADE FOR LINE PURGING.
9. 20ø DOMESTIC COLD WATER SHUT-OFF VALVE FOR LINE PURGING OF WET WELL HOSE BIBBS.
10. 15ø DOMESTIC COLD WATER DRAIN LINE CONNECTED TO SUMP PUMP VENT LINE.
11. 15ø DOMESTIC COLD WATER DRAIN LINE FROM WET WELL HOSE BIBBS.

This drawing has been prepared for the use of AECOM's client and may not be used, reproduced or relied upon by third parties, except as agreed by AECOM and its client, as required by law or for use by governmental reviewing agencies. AECOM accepts no responsibility and denies any liability whatsoever to any party that modifies this drawing without AECOM's express written consent. Do not scale this document. All measurements must be obtained from the stated dimensions.

AECOM

PROJECT

City of Brandon
Kirkcaldy Lift Station

CLIENT

City of Brandon
Brandon, Manitoba

City of BRANDON

CONSULTANT

AECOM
99 Commerce Drive
Winnipeg, Manitoba R3P 0Y7
204.477.5381 tel 204.284.2040 fax
www.aecom.com

REGISTRATION

PROVINCE OF MANITOBA
B.C. WATSON
4/12/2018
REGISTERED PROFESSIONAL ENGINEER

APEGM
Certificate of Authorization
AECOM Canada Ltd.
No. 4671 Date: 2018.12.14

ISSUE/REVISION

I/R	DATE	DESCRIPTION
1	2018.12.14	ISSUED FOR CONSTRUCTION
0	2018.07.27	ISSUED FOR TENDER

PROJECT NUMBER

60247924

SHEET TITLE

KIRKCALDY LIFT STATION
MECHANICAL
LOWER LEVEL
PLUMBING

SHEET NUMBER

M-100

Project Management Initials:Designer: Designer Checked: Checker Approved: Approver ANSI D 559mm x 864mm
Last Plotted: 12/14/2018 10:54:32 AM
Filename: P:\60247924\000-CAD\01-MODELS\MI\Design Files\60247924-MOD-00-M_V17_perez2.rvt

Printed on ___% Post-Consumer Recycled Content Paper

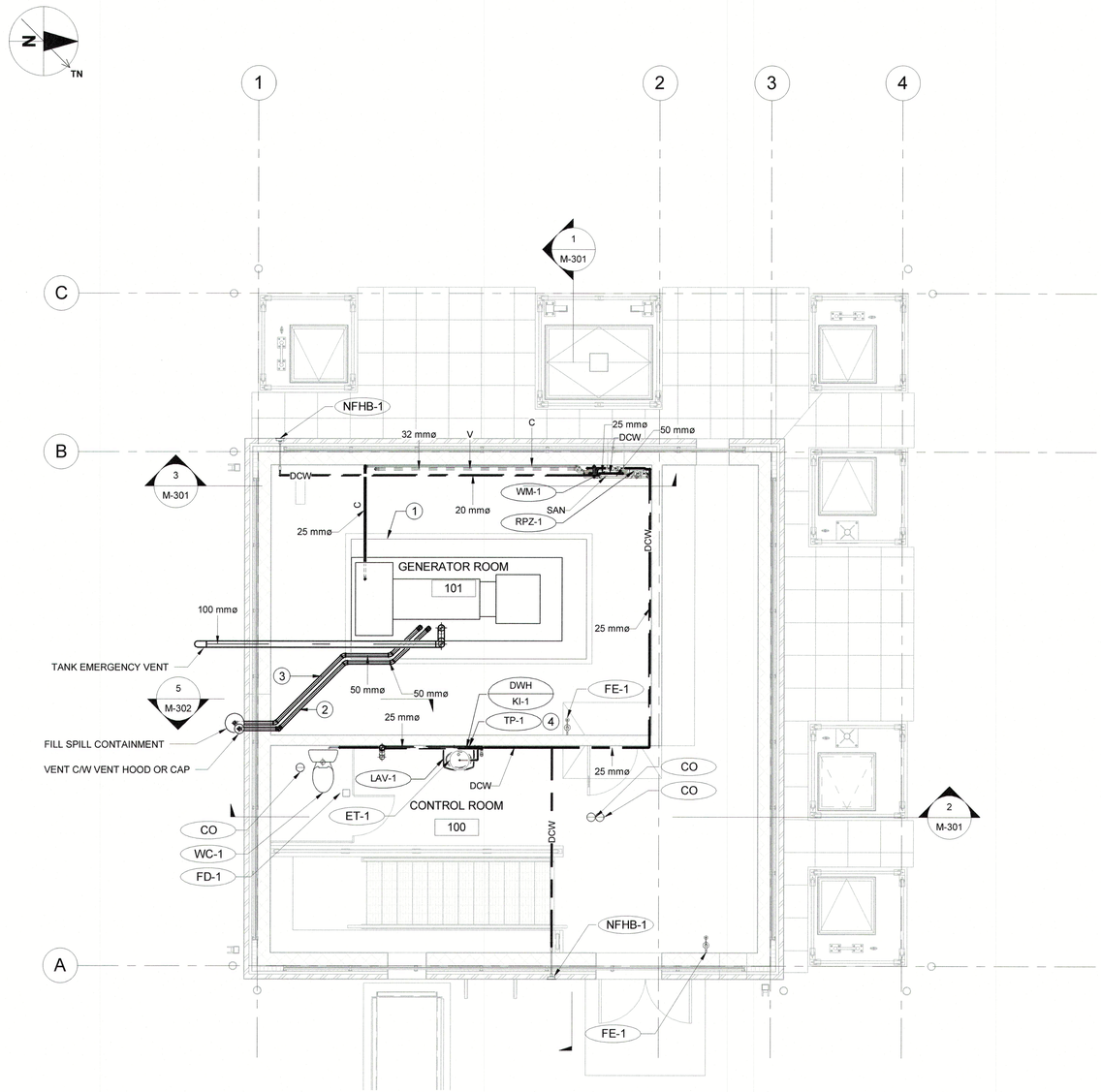

1 | MAIN LEVEL-PLUMBING

M-301 | SCALE: 1 : 50

GENERAL NOTES:

1. PROVIDE BACKFLOW PREVENTOR ON DOMESTIC WATER LINE.
2. HANG SANITARY LINE AS CLOSE AS POSSIBLE TO UNDERSIDE OF STRUCTURE AND MAINTAIN A 1% SLOPE.
3. SEE DETAIL 5 ON DWG.M-404 FOR FUEL PIPING AND SPILL BOX DETAIL.

DRAWING NOTES:

1. GEN SET BELLY TANK.
2. 50ø TANK VENT SLOPE TO TANK.
3. 50ø TANK FILL LINE SLOPE TO TANK.
4. CONNECT TRAP PRIMER DEVICE TO LAV-1 DOMESTIC COLD WATER SUPPLY.

This drawing has been prepared for the use of AECOM's client and may not be used, reproduced or relied upon by third parties, except as agreed by AECOM and its client, as required by law or for use by governmental reviewing agencies. AECOM accepts no responsibility and denies any liability whatsoever to any party that modifies this drawing without AECOM's express written consent. Do not scale this document. All measurements must be obtained from the stated dimensions.

AECOM

PROJECT

City of Brandon
Kirkcaldy Lift Station

CLIENT

City of Brandon
Brandon, Manitoba

City of BRANDON

CONSULTANT

AECOM
99 Commerce Drive
Winnipeg, Manitoba R3P 0Y7
204.477.5381 tel 204.284.2040 fax
www.aecom.com

REGISTRATION

PROVINCE OF MANITOBA
B.C. WATSON
REGISTERED PROFESSIONAL ENGINEER
14/12/2018

APEGM
Certificate of Authorization
AECOM Canada Ltd.
No. 4671 Date: 2018.12.14

ISSUE/REVISION

I/R	DATE	DESCRIPTION
1	2018.12.14	ISSUED FOR CONSTRUCTION
0	2018.07.27	ISSUED FOR TENDER

PROJECT NUMBER

60247924

SHEET TITLE

KIRKCALDY LIFT STATION
MECHANICAL
MAIN LEVEL
PLUMBING

SHEET NUMBER

M-101

Project Management Initials:Designer: Designer Checked: Checker Approved: Approver ANSI D 559mm x 864mm
Last Plotted: 12/14/2018 10:54:35 AM
Filename: P:\60247924\000-CAD\01-MODEL\MEDesign Files\60247924-MOD-00-M_V17_perez2.rvt
Printed on ___% Post-Consumer Recycled Content Paper

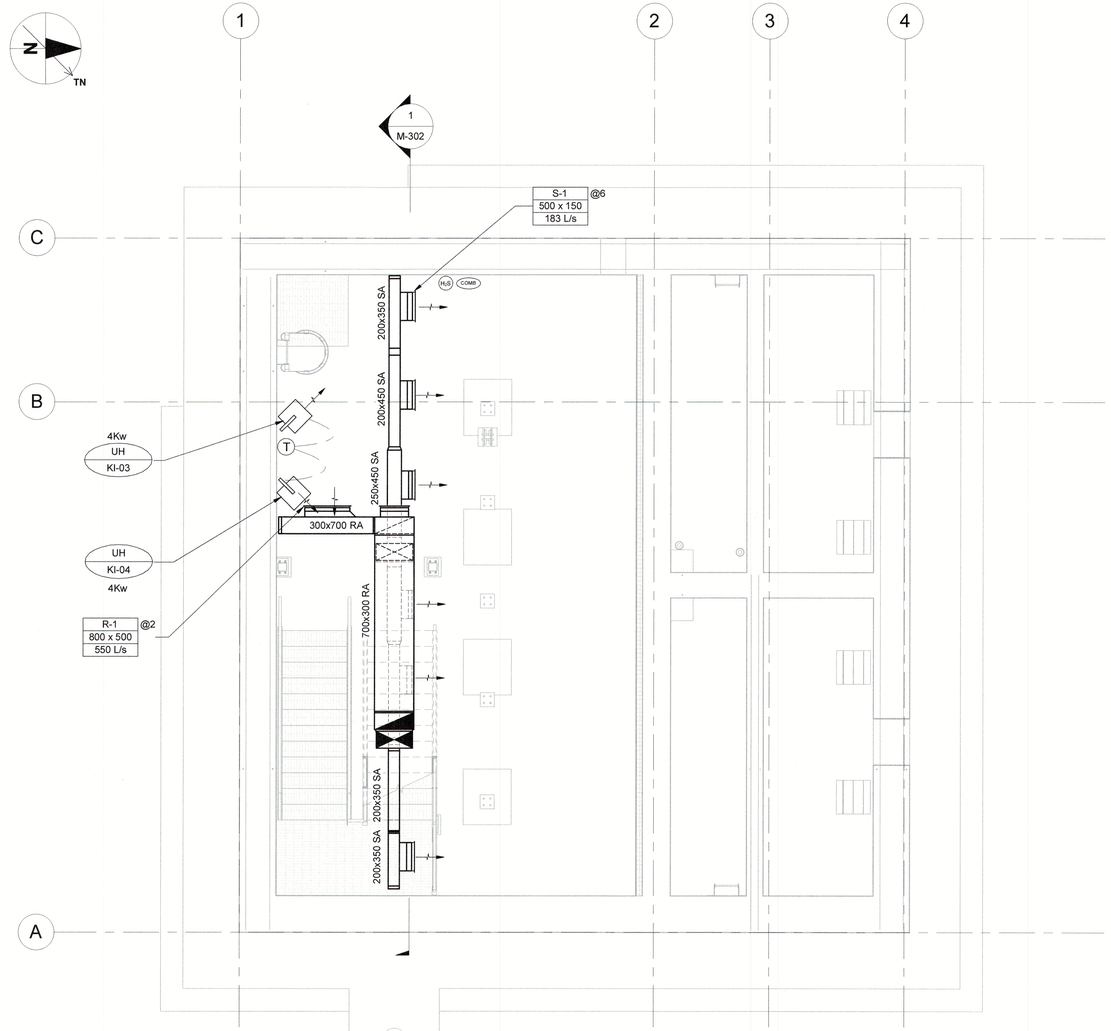

1 | LOWER LEVEL- HVAC

M-301 | SCALE: 1 : 50

Project Management Initials:Designer: Designer Checked: Checker Approved: Approver ANSI D 559mm x 864mm

Last Plotted: 12/14/2018 10:54:36 AM
Filename: P:\60247924\000-CAD\01-MODELS\MI\Design Files\60247924-MOD-00-M_V17_perez2.rvt

Printed on ___% Post-Consumer Recycled Content Paper

This drawing has been prepared for the use of AECOM's client and may not be used, reproduced or relied upon by third parties, except as agreed by AECOM and its client, as required by law or for use by governmental reviewing agencies. AECOM accepts no responsibility and denies any liability whatsoever to any party that modifies this drawing without AECOM's express written consent. Do not scale this document. All measurements must be obtained from the stated dimensions

AECOM

PROJECT

City of Brandon
Kirkcaldy Lift Station

CLIENT

City of Brandon
Brandon, Manitoba

City of BRANDON

CONSULTANT

AECOM
99 Commerce Drive
Winnipeg, Manitoba R3P 0Y7
204.477.5381 tel 204.284.2040 fax
www.aecom.com

REGISTRATION

PROVINCE OF MANITOBA
B.C. WATSON
14/12/2018
REGISTERED PROFESSIONAL ENGINEER

APEGM
Certificate of Authorization
AECOM Canada Ltd.
No. 4671 Date: 2018.12.14

ISSUE/REVISION

I/R	DATE	DESCRIPTION
1	2018.12.14	ISSUED FOR CONSTRUCTION
0	2018.07.27	ISSUED FOR TENDER

PROJECT NUMBER

60247924

SHEET TITLE

KIRKCALDY LIFT STATION
MECHANICAL
LOWER LEVEL
HVAC

SHEET NUMBER

M-102

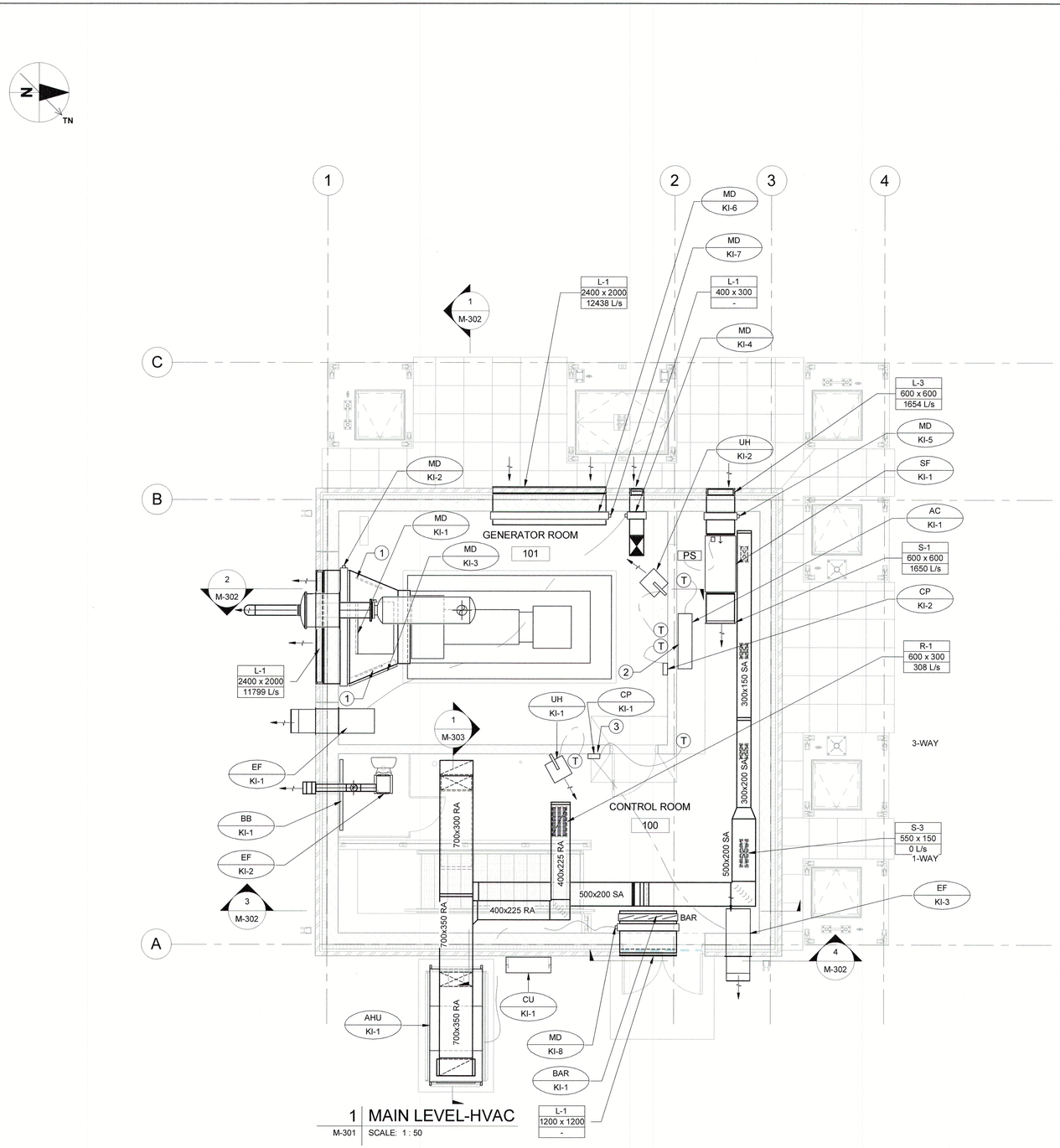

1 MAIN LEVEL-HVAC
M-301 SCALE: 1 : 50

DRAWING NOTES:

1. 600 x 600 DAMPER ACCESS PANEL.
2. RUN 25mm CONDENSATE LINE TO NEAREST DRAIN.
3. HVAC CONTROL PANEL.

AECOM

PROJECT

City of Brandon
Kirkcaldy Lift Station

CLIENT

City of Brandon
Brandon, Manitoba

CONSULTANT

AECOM
99 Commerce Drive
Winnipeg, Manitoba R3P 0Y7
204.477.5381 tel 204.284.2040 fax
www.aecom.com

REGISTRATION

PROVINCE OF MANITOBA
B.C. WATSON
14/12/2018
REGISTERED PROFESSIONAL ENGINEER

APEGM
Certificate of Authorization
AECOM Canada Ltd.
No. 4671 Date: 2018.12.14

ISSUE/REVISION

I/R	DATE	DESCRIPTION
1	2018.12.14	ISSUED FOR CONSTRUCTION
0	2018.07.27	ISSUED FOR TENDER

PROJECT NUMBER

60247924

SHEET TITLE

KIRKCALDY LIFT STATION
MECHANICAL
MAIN LEVEL
HVAC

SHEET NUMBER

M-103

This drawing has been prepared for the use of AECOM's client and may not be used, reproduced or relied upon by third parties, except as agreed by AECOM and its client, as required by law or for use by governmental reviewing agencies. AECOM accepts no responsibility, and denies any liability whatsoever, to any party that modifies this drawing without AECOM's express written consent. Do not scale this document. All measurements must be obtained from the stated dimensions.

Project Management Initials:Designer: Designer Checked: Checker Approved: Approver ANSI D 559mm x 864mm

Last Plotted: 12/14/2018 10:54:39 AM
Filename: P:\60247924\000-CAD\01-MODELS\M\Design Files\60247924-MOD-00-M_V17_perez2.rvt

Printed on ___% Post-Consumer Recycled Content Paper

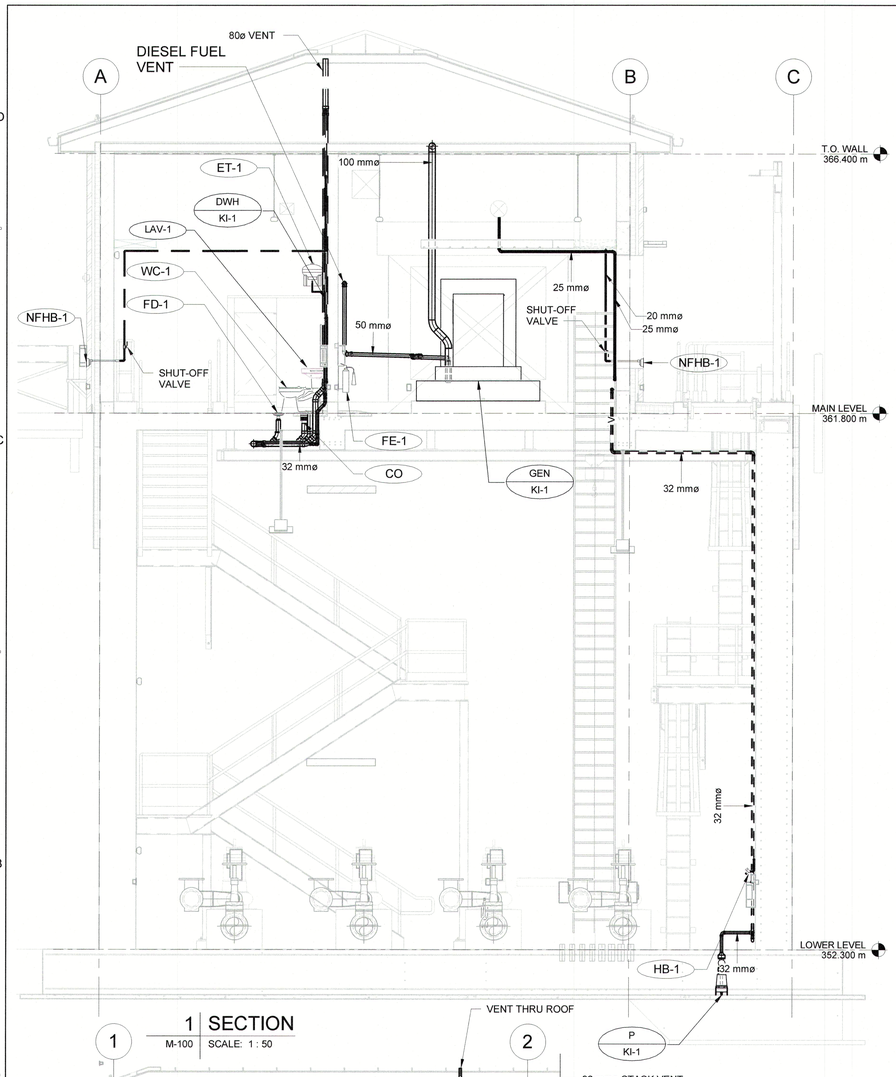

1 | SECTION
M-100 | SCALE: 1 : 50

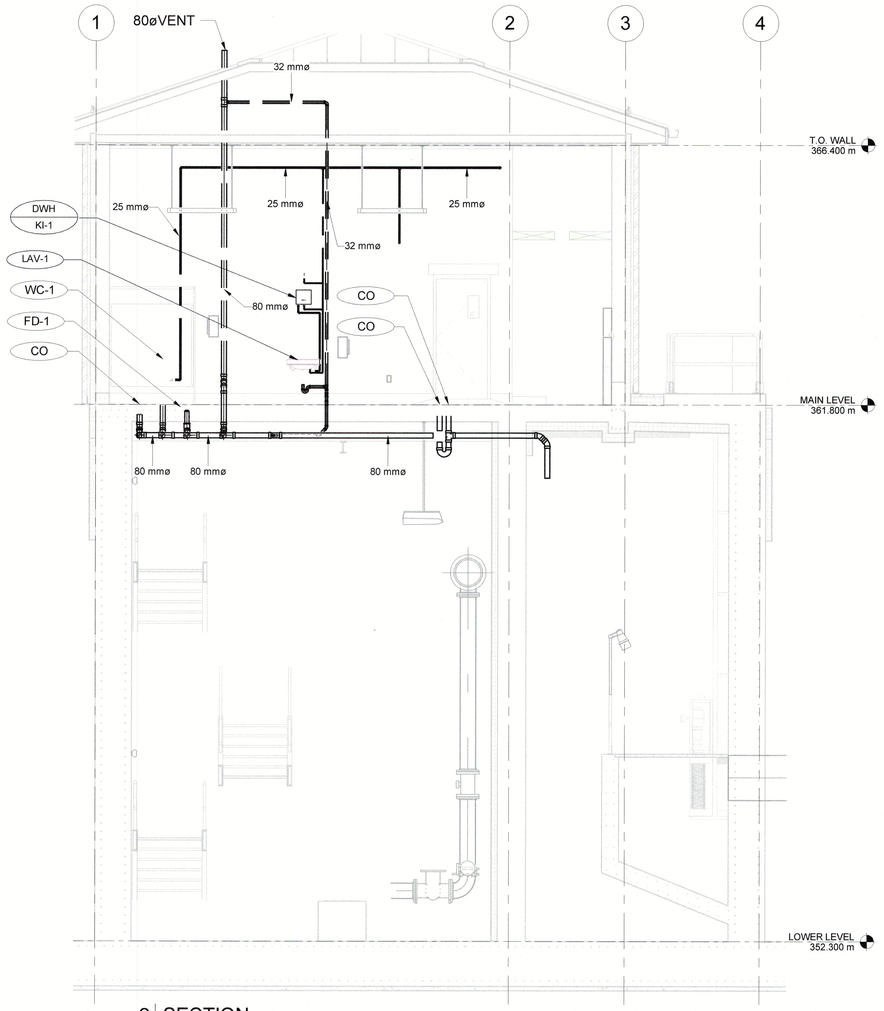

2 | SECTION
M-100 | SCALE: 1 : 50

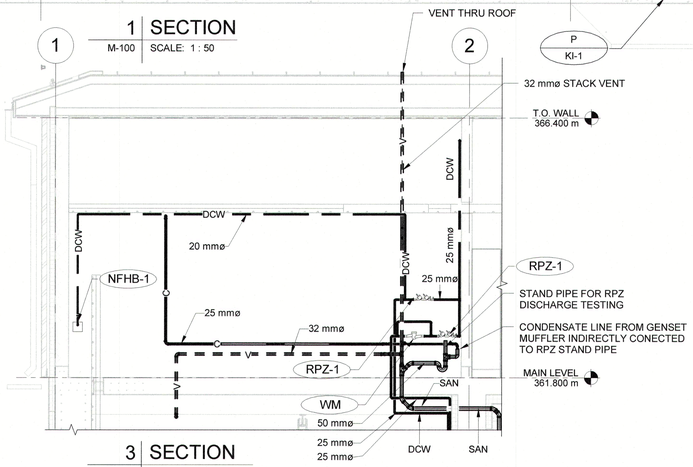

3 | SECTION
M-100 | SCALE: 1 : 50

This drawing has been prepared for the use of AECOM's client and may not be used, reproduced or relied upon by third parties, except as agreed by AECOM and its client as required by law or by governmental reviewing agencies. AECOM accepts no responsibility, and denies any liability whatsoever, to any party that modifies this drawing without AECOM's express written consent. Do not scale this document. All measurements must be obtained from the stated dimensions.

AECOM

PROJECT

City of Brandon
Kirkcaldy Lift Station

CLIENT

City of Brandon
Brandon, Manitoba

CONSULTANT

AECOM
99 Commerce Drive
Winnipeg, Manitoba R3P 0Y7
204.477.5381 tel 204.284.2040 fax
www.aecom.com

REGISTRATION

PROVINCE OF MANITOBA
B.C. WATSON
14/12/2018
REGISTERED PROFESSIONAL ENGINEER

APEGM
Certificate of Authorization
AECOM Canada Ltd.
No. 4671 Date: 2018.12.14

ISSUE/REVISION

I/R	DATE	DESCRIPTION
1	2018.12.14	ISSUED FOR CONSTRUCTION
0	2018.07.27	ISSUED FOR TENDER

PROJECT NUMBER

60247924

SHEET TITLE

KIRKCALDY LIFT STATION
MECHANICAL
SECTIONS

SHEET NUMBER

M-301

Project Management Initials:Designer: Designer Checked: Checker Approved: Approver ANSI D 559mm x 864mm
Last Plotted: 12/14/2018 10:54:44 AM
Filename: P:\60247924\000-CAD\01-MODEL\MEP\Design Files\60247924-MOD-00-M_V17_perez2.rvt

Printed on ___% Post-Consumer Recycled Content Paper

Project Management Initials:Designer: Designer Checked: Checker Approved: Approver ANSI D 559mm x 864mm

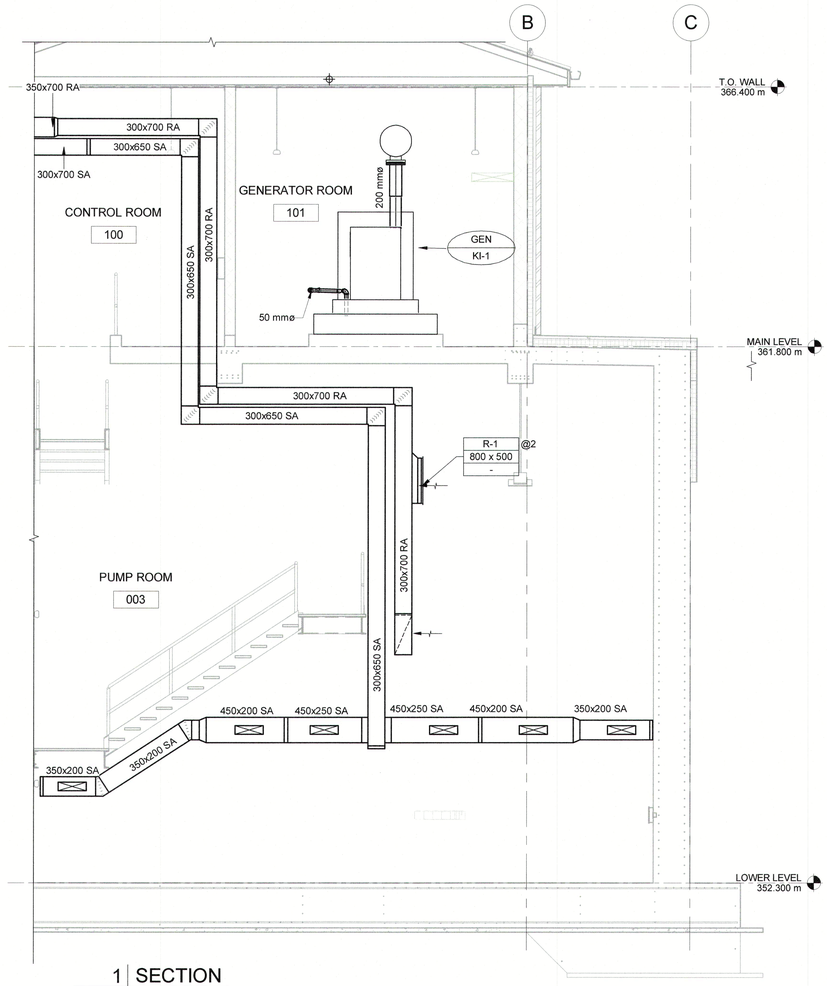

1 | SECTION
M-102 | SCALE: 1 : 50

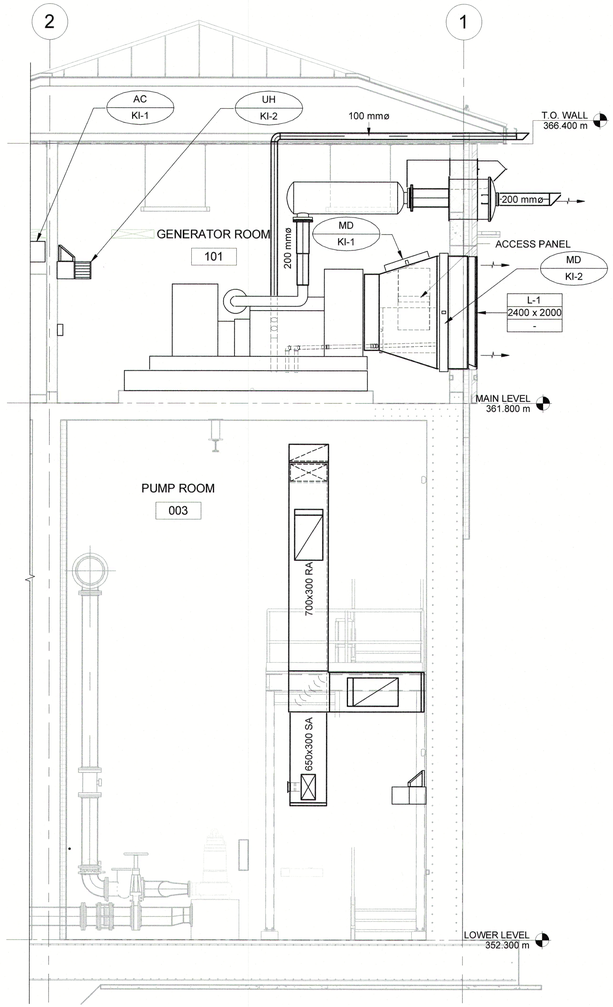

2 | SECTION
M-103 | SCALE: 1 : 50

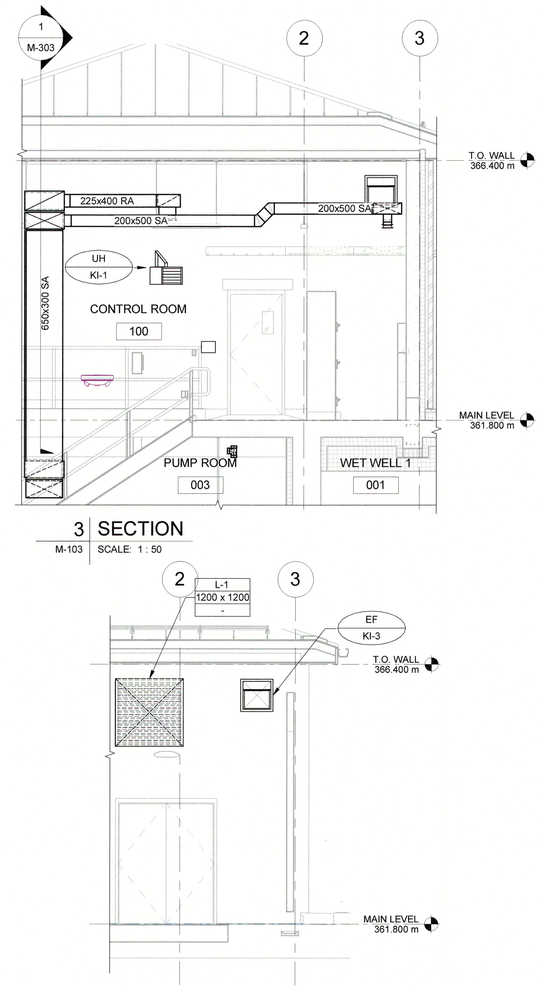

3 | SECTION
M-103 | SCALE: 1 : 50

4 | SECTION
M-103 | SCALE: 1 : 50

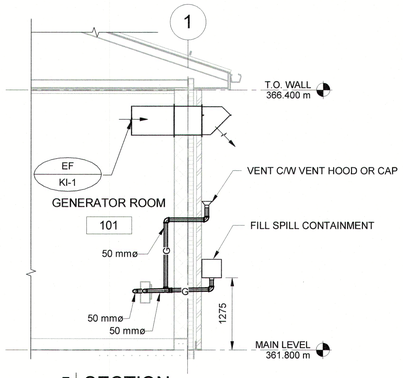

5 | SECTION
M-101 | N.T.S.

This drawing has been prepared for the use of AECOM's client and may not be used, reproduced or relied upon by third parties, except as agreed by AECOM and its client, as required by law or for use by governmental reviewing agencies. AECOM accepts no responsibility, and denies any liability whatsoever, to any party that modifies this drawing without AECOM's express written consent. Do not scale this document. All measurements must be obtained from the stated dimensions.

AECOM

PROJECT

City of Brandon
Kirkcaldy Lift Station

CLIENT

City of Brandon
Brandon, Manitoba

City of BRANDON

CONSULTANT

AECOM
99 Commerce Drive
Winnipeg, Manitoba R3P 0Y7
204.477.5381 tel 204.284.2040 fax
www.aecom.com

REGISTRATION

PROVINCE OF MANITOBA
B.C. WATSON
14/12/2018
REGISTERED PROFESSIONAL ENGINEER

APEGM
Certificate of Authorization
AECOM Canada Ltd.
No. 4671 Date: 2018.12.14

ISSUE/REVISION

I/R	DATE	DESCRIPTION
1	2018.12.14	ISSUED FOR CONSTRUCTION
0	2018.07.27	ISSUED FOR TENDER

PROJECT NUMBER

60247924

SHEET TITLE

KIRKCALDY LIFT STATION
MECHANICAL
SECTIONS

SHEET NUMBER

M-302

Last Plotted: 12/14/2018 11:03:35 AM
Filename: P:\60247924\000-CAD\01-MODELS\M\Design Files\60247924-MOD-00-M_V17_perez2.rvt

Printed on ___% Post-Consumer Recycled Content Paper

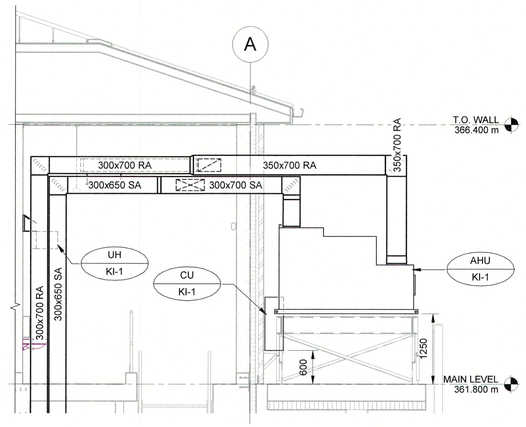

1 | SECTION
M-103 | SCALE: 1 : 50

This drawing has been prepared for the use of AECOM's client and may not be used, reproduced or relied upon by third parties, except as agreed by AECOM and as required by law or by governmental reviewing agencies. AECOM accepts no responsibility, and denies any liability whatsoever, to any party that modifies this drawing without AECOM's express written consent. Do not scale this document. All measurements must be obtained from the stated dimensions.

AECOM

PROJECT

City of Brandon
Kirkcaldy Lift Station

CLIENT

City of Brandon
Brandon, Manitoba

City of BRANDON

CONSULTANT

AECOM
99 Commerce Drive
Winnipeg, Manitoba R3P 0Y7
204.477.5381 tel 204.284.2040 fax
www.aecom.com

REGISTRATION

PROVINCE OF MANITOBA
B.C. WATSON
14/12/2018
REGISTERED PROFESSIONAL ENGINEER

APEGM
Certificate of Authorization
AECOM Canada Ltd.
No. 4671 Date: 2018.12.14

ISSUE/REVISION

I/R	DATE	DESCRIPTION
1	2018.12.14	ISSUED FOR CONSTRUCTION
0	2018.07.27	ISSUED FOR TENDER

PROJECT NUMBER

60247924

SHEET TITLE

KIRKCALDY LIFT STATION
MEHANICAL
SECTIONS

SHEET NUMBER

M-303

Project Management Initials:Designer: Designer Checked: Checker Approved: Approver ANSI D 559mm x 864mm
Last Plotted: 12/14/2018 10:54:48 AM
Filename: P:\60247924\000-CAD\01-MODEL\SWMDesign Files\60247924-MOD-00-M_V17_perez2.rvt
Printed on ___% Post-Consumer Recycled Content Paper

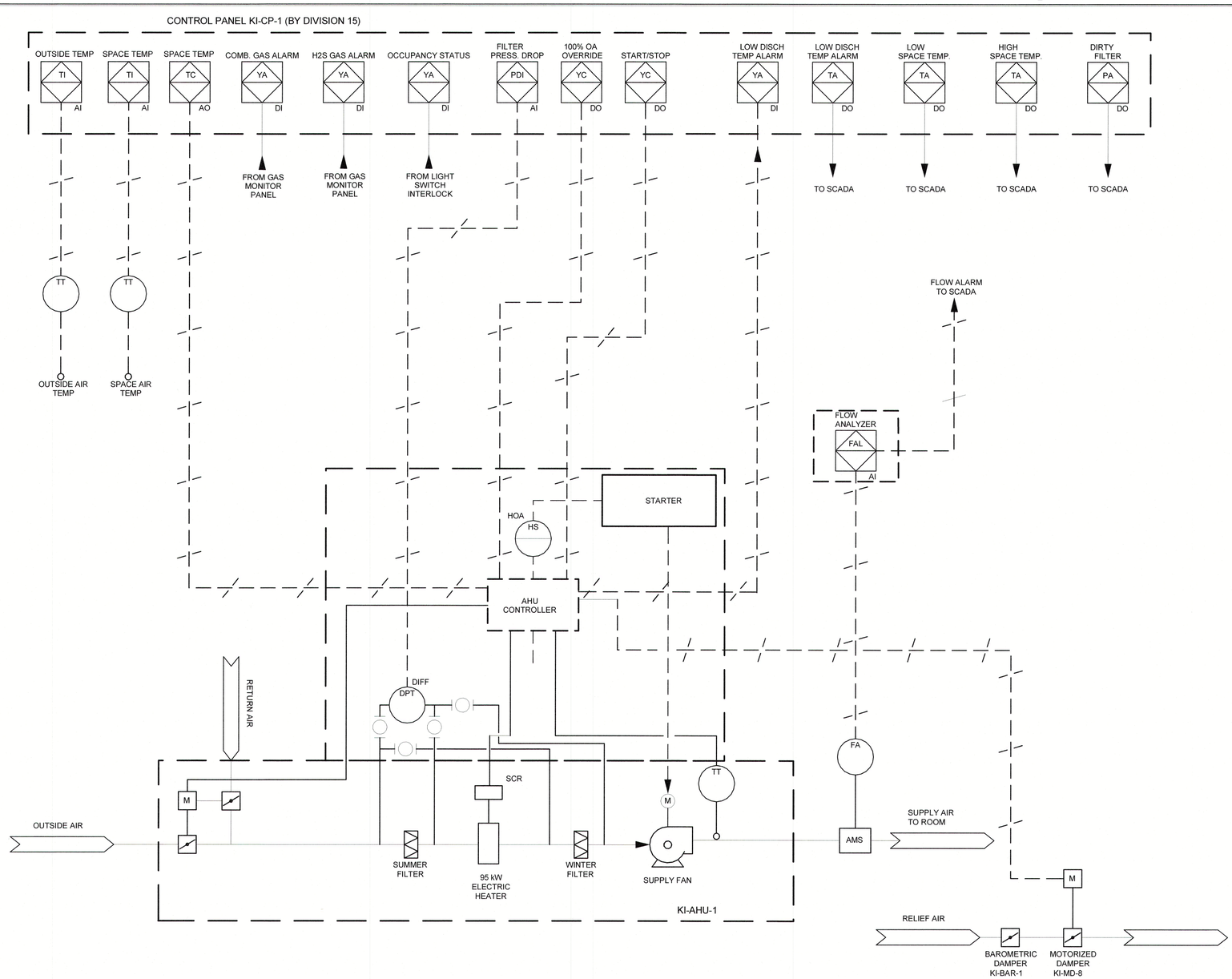

1 CONTROL SCHEMATIC

N.T.S.

Project Management Initials:Designer: Designer Checked: Checker Approved: Approver ANSI D 559mm x 864mm

Last Plotted: 12/14/2018 10:54:49 AM
Filename: P:\60247924\000-CAD\01-MODELS\MI\Design Files\60247924-MOD-00-M_V17_perez2.rvt

Printed on ___% Post-Consumer Recycled Content Paper

This drawing has been prepared for the use of AECOM's client and may not be used, reproduced or relied upon by third parties, except as agreed by AECOM and as required by law or by governmental bodies having jurisdiction. AECOM accepts no responsibility and denies any liability whatsoever to any party that modifies this drawing without AECOM's express written consent. Do not scale this document. All measurements must be obtained from the stated dimensions.

AECOM

PROJECT

City of Brandon
Kirkcaldy Lift Station

CLIENT

City of Brandon
Brandon, Manitoba

City of BRANDON

CONSULTANT

AECOM
99 Commerce Drive
Winnipeg, Manitoba R3P 0Y7
204.477.5381 tel 204.284.2040 fax
www.aecom.com

REGISTRATION

PROVINCE OF MANITOBA
B.C. WATSON
14/12/2018
REGISTERED PROFESSIONAL ENGINEER

APEGM
Certificate of Authorization
AECOM Canada Ltd.
No. 4671 Date: 2018.12.14

ISSUE/REVISION

I/R	DATE	DESCRIPTION
1	2018.12.14	ISSUED FOR CONSTRUCTION
0	2018.07.27	ISSUED FOR TENDER

PROJECT NUMBER

60247924

SHEET TITLE

KIRKCALDY LIFT STATION
MECHANICAL
CONTROL SCHEMATIC

SHEET NUMBER

M-401

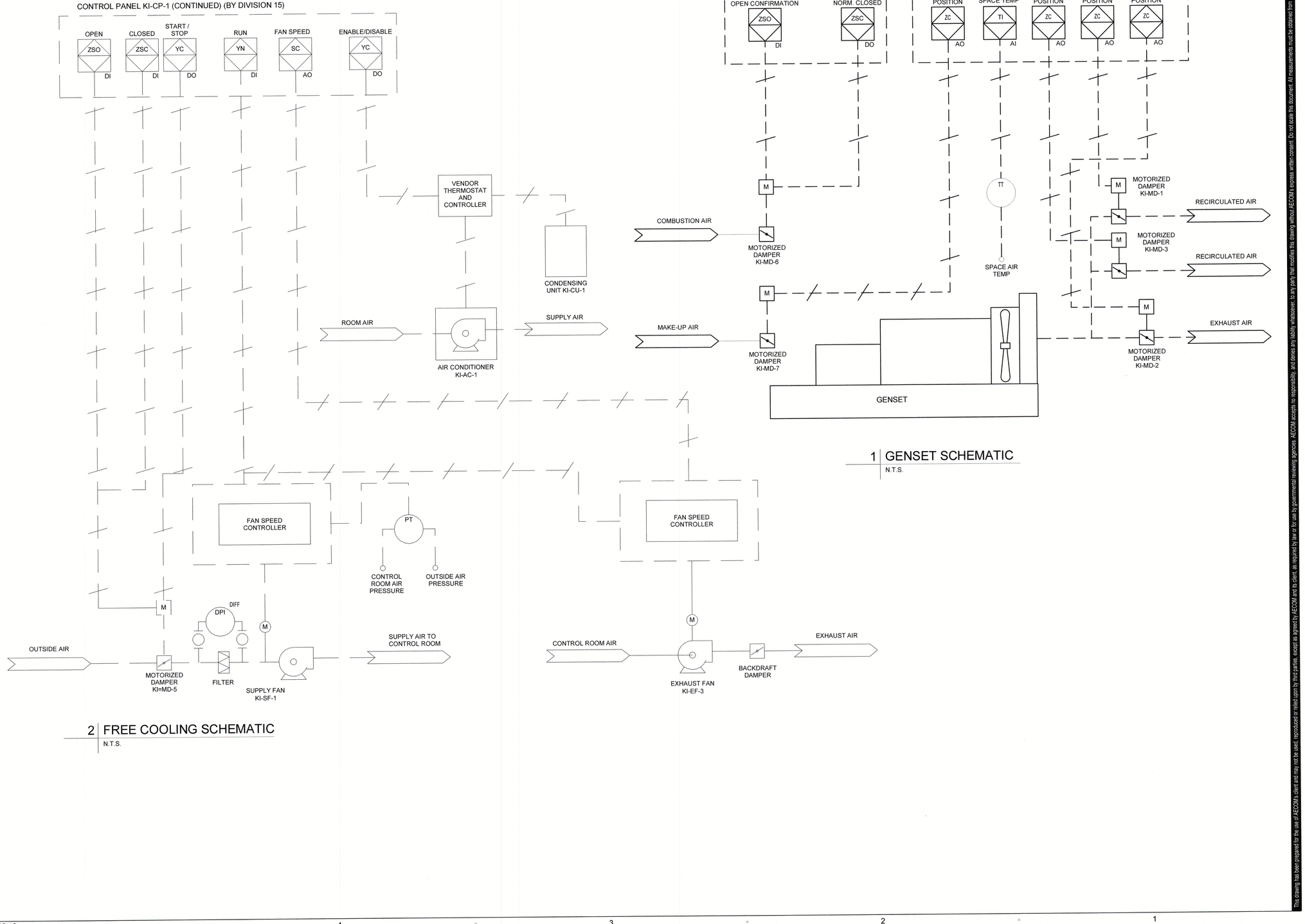

1 GENSET SCHEMATIC

N.T.S.

2 FREE COOLING SCHEMATIC

N.T.S.

This drawing has been prepared for the use of AECOM's client and may not be used, reproduced or relied upon by third parties, except as agreed by AECOM and its client, as required by law or for use by governmental reviewing agencies. AECOM accepts no responsibility and denies any liability whatsoever, to any party that modifies this drawing without AECOM's express written consent. Do not scale this document. All measurements must be obtained from the stated dimensions.

AECOM

PROJECT

City of Brandon
Kirkcaldy Lift Station

CLIENT

City of Brandon
Brandon, Manitoba

CONSULTANT

AECOM
99 Commerce Drive
Winnipeg, Manitoba R3P 0Y7
204.477.5381 tel 204.284.2040 fax
www.aecom.com

REGISTRATION

PROVINCE OF MANITOBA
B.C. WATSON
14/12/2018
REGISTERED PROFESSIONAL ENGINEER

APEGM
Certificate of Authorization
AECOM Canada Ltd.
No. 4671 Date: 2018.12.14

ISSUE/REVISION

I/R	DATE	DESCRIPTION
1	2018.12.14	ISSUED FOR CONSTRUCTION
0	2018.07.27	ISSUED FOR TENDER

PROJECT NUMBER

60247924

SHEET TITLE

KIRKCALDY LIFT STATION
MECHANICAL
CONTROL SCHEMATIC
DIESEL GENERATOR

SHEET NUMBER

M-402

Project Management Initials:Designer: Designer Checked: Checker Approved: Approver ANSI D 559mm x 864mm

Last Plotted: 12/14/2018 10:54:49 AM
Filename: P:\60247924\000-CAD\01-MODELS\MDesign Files\60247924-MOD-00-M_V17_perez2.rvt

Printed on ___% Post-Consumer Recycled Content Paper

AIR HANDLING UNIT SCHEDULE

AHU TAG	LOCATION	SERVICING	TYPE	MANUFACTURER	MODEL	SUPPLY AIR FLOW (L/S)	EXTERNAL STATIC PRESSURE (Pa)	MOTOR SIZE (Kw)	VFD	HEATING COIL	ENTERING AIR TEMPERATURE DRY BULB (°C)	HEATING CAPACITY (kW)	OVERALL WIDTH (mm)	OVERALL LENGTH (mm)	OVERALL HEIGHT (mm)	APPROX. WEIGHT (KG)	FILTER BANK	COMMENTS/ ACCESSORIES
KI-AHU-1	EXTERIOR	PUMP ROOM AND CONTROL ROOM	DRAW-THROUGH	ENGINEERED AIR	LM3/K/C/MV	1,510	375.00	2.24	NO	ELECTRIC	-34.0	95	1,168.0	2,667.0	813.0	600.0	50MM THICK MERV 8	MIXING BOX, ACCESS SECTIONS BETWEEN FILTERS/COILS, VERTICAL DISCHARGE, DISCHARGE AIR TEMPERATURE, MIXING CONTROL AND SCR HEATING COIL CONTROL,

FAN SCHEDULE

								MOTOR				
TAG	AREA SERVED	MANUFACTURER	MODEL	AIR FLOW (LPS)	EXTERNAL S.P. (Pa)	TOTAL S.P. (Pa)	FAN RPM	RPM	KW	VOLTS	PHASE	COMMENTS / ACCESSORIES
KI-EF-1	GENERATOR ROOM	GREENHECK	SE1-8-440-VG	95	62	62	1673	1673	0.07	120	1	VARAIBLE SPEED EC MOTOR, BACKDRAFT DAMPER
KI-EF-2	WASHROOM	GREENHECK	SP-70	25	62	62	675	675	0.02	120	1	HOODED WALL CAP
KI-EF-3	CONTROL ROOM	GREENHECK	SE1-16-436-VG	1,654	62	62	1653	1653	0.56	208	1	VARAIBLE SPEED EC MOTOR, BACKDRAFT DAMPER, OSHA MOTOR SIDE GUARD
KI-SF-1	CONTROL ROOM	GREENHECK	SQ-160-VG	1,654	125	235	1492	1492	1.5	208	1	VARIABLE SPEED EC MOTOR, TRANSFORMER, INSULATION, FILTER BOX, MERV8 FILTER, HANGING ISOLATORS

DAMPER SCHEDULE

TAG	DESCRIPTION OR LOCATION	MANUFACTURER	MODEL	SIZE (mm)	BLADE ACTION	ACTION	FAIL POSITION	ACTUATOR	VOLTS	COMMENTS/ACCESSORIES
KI-MD-1	GENERATOR RADIATOR RECIRCULATION	TAMCO	9000 BF	1000 x 700	OPPOSED	MODULATING	CLOSED	BELIMO	24	
KI-MD-2	GENERATOR RADIATOR EXHAUST	TAMCO	9000 BF	2400 x 2000	OPPOSED	MODULATING	OPEN	BELIMO	24	
KI-MD-3	GENERATOR RADIATOR RECIRCULATION	TAMCO	9000 BF	1000 x 700	OPPOSED	MODULATING	CLOSED	BELIMO	24	
KI-MD-4	GENERATOR ROOM VENTILATION	TAMCO	9000 BF	300 x400	PARALLEL	2 POSITION	OPEN	BELIMO	24	
KI-MD-5	CONTROL ROOM VENTILATION	TAMCO	9000 BF	600 x 600	PARALLEL	2 POSITION	OPEN	BELIMO	24	
KI-MD-6	GENERATOR COMBUSTION AIR	TAMCO	9000 BF	2400 x 150	PARALLEL	2 POSITION	OPEN	BELIMO	24	HIGH SPEED ACTUATOR - LESS THAN 4 SECONDS TO OPEN
KI-MD-7	GENERATOR COOLING INTAKE	TAMCO	9000 BF	2400 x 1850	OPPOSED	MODULATING	OPEN	BELIMO	24	
KI-MD-8	CONTROL ROOM VENTILATION	TAMCO	9000 BF	1200 X 1200	PARALLEL	2 POSITION	OPEN	BELIMO	24	
KI-BAR-1	GENERAL RELIEF AIR	TAMCO	7000CW	1200 X 1200	PARALLEL	BAROMETRIC	NA	NA	NA	

CONDENSING UNIT SCHEDULE

Tag	Unit Served	Location	Manufacturer	Model	Compressor Type	Capacity - kW (MBH)	Efficiency - SEER	Refrigerant Type	Power Supply	Min. Ampacity	Depth – mm (inch)	Width – mm (inch)	Height - mm (inch)	Weight - kg (lbs)	Remarks
KI-CU-1	KI-AC-1	Bldg. Exterior	Mitsubishi	PUY-A36NHA4	DC Inverter / Twin Rotary	10.0 (34.2)	14	R410A	208/1/60	25	330 (13)	950 (37.375)	943 (37.125)	74 (163)	Comes as one package with KI-AC-1, C/W -40°C LOW AMBIENT OPTION

EVAPORATOR SCHEDULE

Tag	Unit Served	Location	Manufacturer	Model	No. Fans	Capacity - kW (MBH)	Refrigerant Type	Power Supply	Min. Ampacity	Depth – mm (inch)	Width – mm (inch)	Height - mm (inch)	Weight - kg (lbs)	Remarks
KI-AC-1	KI-CU-1	CONTROL ROOM	Mitsubishi	PKA-A36FA4	1	10.0 (34.2)	R410A	208/1/60	1	235 (9.25)	1,170 (46.062)	365 (14.375)	21 (46)	Comes as one package with KI-CU-1

PUMP SCHEDULE

TAG	LOCATION	SERVICE	MANUFACTURER	MODEL	FLUID	FLOW, L/S	HEAD, METERS	MOTOR, AMPS	Power, V,PH,Hz	CASING	IMPELLER	COMMENTS
KI-P-1	PUMP ROOM	BUILDING SANITARY	Liberty	LEH105M2-2	WASTE	1.9	15	3.3	575/3/60	CAST IRON	CAST IRON	

GRILLE AND LOUVER SCHEDULE

TAG	DESCRIPTION	MANUFACTURER	MODEL	MOUNTING	PATTERN	FACE SIZE (mm)	FINISH	COMMENTS/ACCESSORIES
S-1	SUPPLY AIR GRILLE	EH PRICE	152D/S / VCS5	TYPE A	DOUBLE DEFLECTION	--	B15	C/W HEAVY DUTY DAMPER
S-2	SUPPLY AIR DIFFUSER	EH PRICE	CVD/F/3L	TYPE A	3-WAY	--	B15	C/W DAMPER
S-3	SUPPLY AIR DIFFUSER	EH PRICE	CVD/F/1L	TYPE A	1-WAY	--	B15	C/W DAMPER
R-1	RETURN GRILLE	EH PRICE	80/F	TYPE A	--	--	B15	C/W DAMPER
L-1	INTAKE/EXHAUST LOUVER	EH PRICE	DE635	WALL	PER DWG	--	DURANAR	COLOUR BY ARCHITECT

TRAP PRIMER SCHEDULE

TAG	DESCRIPTION	MANUFACTURER	MODEL	COMMENTS/ACCESSORIES
KI-TP-1	AUTOMATIC TRAP PRIMER	PRECISION PLUMBING PRODUCTS	P-1	CONNECT TO DOMESTIC COLD WATER LINE AS PER MANUFACTURERS RECOMMENDATIONS

UNIT HEATER SCHEDULE

TAG	LOCATION	MANUFACTURER	MODEL	HEATING CAPACITY, kW	VOLTS/Ph/Hz	THEMOSTAT	ACCESSORIES
KI-UH-1	CONTROL ROOM	REZNOR	EGHB-4	4	575/3/60	WALL MOUNTED	WALL MOUNTING BRACKET
KI-UH-2	GENERATOR ROOM	REZNOR	EGHB-10	10	575/3/60	WALL MOUNTED	WALL MOUNTING BRACKET
KI-UH-3	PUMP ROOM	REZNOR	EGHB-4	4	575/3/60	WALL MOUNTED	WALL MOUNTING BRACKET
KI-UH-4	PUMP ROOM	REZNOR	EGHB-4	4	575/3/60	WALL MOUNTED	WALL MOUNTING BRACKET

EXPANSION TANK SCHEDULE

TAG	LOCATION	MANUFACTURER	MODEL	TYPE	TANK CAPACITY (L)	ACCEPTANCE CAPACITY (L)	DIAMETER (mm)	HEIGHT (mm)	COMMENTS
KI-ET-1	Control room	WESSELS	T-12	DIAPHRAM	18	11	269	348	

DOMESTIC WATER HEATER SCHEDULE

TAG	DESCPRITION	LOCATION	MANUFACTURER	MODEL	RATED HEATING OUTPUT (KW) (HIGH / LOW)	VOLTS	PHASE	COMMENTS/ACCESSORIES
KI-DHW-1	TANKLESS DOMESTIC WATER HEATER	CONTROL ROOM	BOSCH	US3	3.4 / 3.0	120	1	

This drawing has been prepared for the use of AECOM's client and may not be used, reproduced or relied upon by third parties, except as agreed by AECOM and as required by law or by governmental reviewing agencies. AECOM assumes no responsibility and denies any liability whatsoever to any party that modifies this drawing without AECOM's express written consent. Do not scale this document. All measurements must be obtained from the stated dimensions.

AECOM

PROJECT

City of Brandon
Kirkcaldy Lift Station

CLIENT

City of Brandon
Brandon, Manitoba

City of BRANDON

CONSULTANT

AECOM
99 Commerce Drive
Winnipeg, Manitoba R3P 0Y7
204.477.5381 tel 204.284.2040 fax
www.aecom.com

REGISTRATION

PROVINCE OF MANITOBA
B.C. WATSON
19/12/2018
REGISTERED PROFESSIONAL ENGINEER

APEGM
Certificate of Authorization
AECOM Canada Ltd.
No. 4671 Date: 2018.12.14

ISSUE/REVISION

I/R	DATE	DESCRIPTION
1	2018.12.14	ISSUED FOR CONSTRUCTION
0	2018.07.27	ISSUED FOR TENDER

PROJECT NUMBER

60247924

SHEET TITLE

KIRKCALDY LIFT STATION
MECHANICAL
SCHEDULES

SHEET NUMBER

M-403

Project Management Initials:Designer: Designer Checked: Checker Approved: Approver: ANSI D 559mm x 864mm

Last Plotted: 12/14/2018 10:54:50 AM
Filename: P:\60247924\000-CAD\01-MODELS\MDesign Files\60247924-MOD-00-M_V17_perez2.rvt

Printed on ___% Post-Consumer Recycled Content Paper

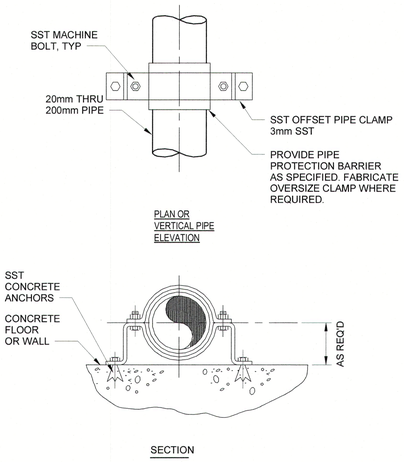

NOTES :

1. ALL DIMENSIONS IN MILLIMETRES, UNLESS OTHERWISE NOTED.

1 PIPE SUPPORT WALL OR FLOOR MOUNTED

N.T.S.

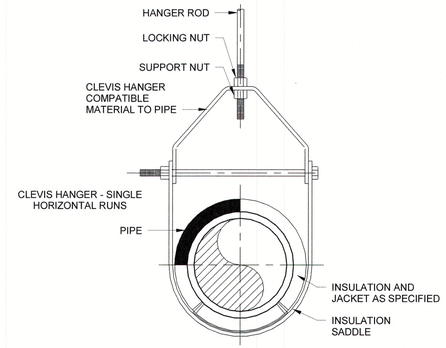

2 PIPE CLEVIS HANGER

N.T.S.

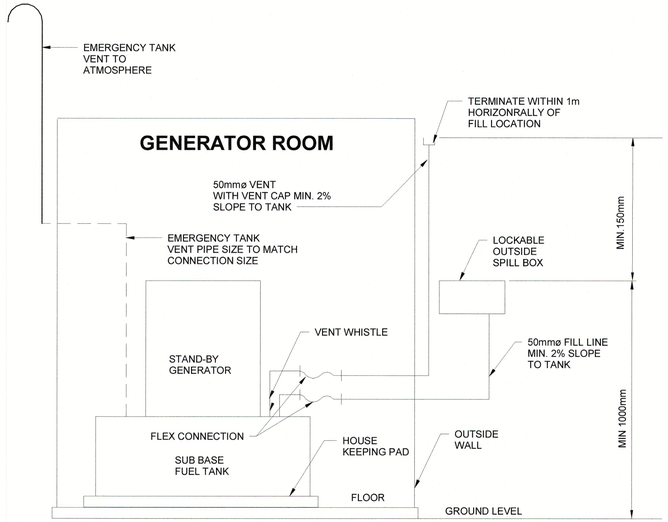

3 SPILL BOX DETAIL

N.T.S.

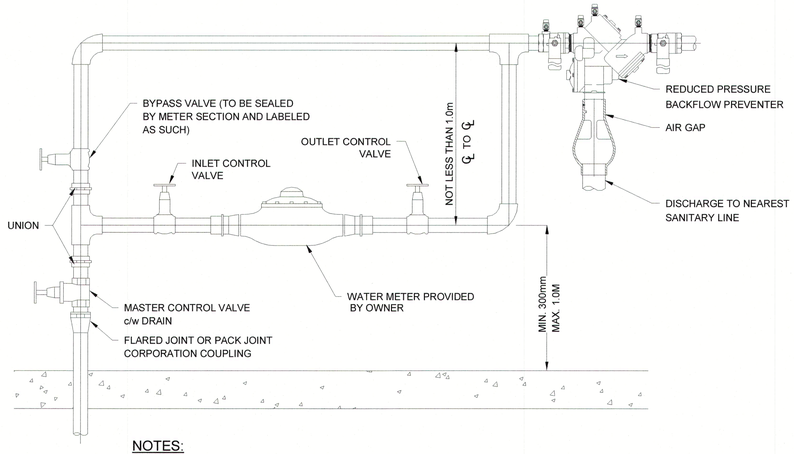

NOTES:

1. PIPING ON EACH SIDE OF METER MUST BE ADEQUATELY SUPPORTED TO THE SATISFACTION OF THE WATERWORKS METER SECTION.
2. PIPING FOR METER MUST BE ON A HORIZONTAL PLANE.
3. MINIMUM DISTANCE OF 300mm BETWEEN ANY WALL AND A METER OR METER TREE.
4. VALVES ARE REQUIRED ADJACENT TO METERS. ALTERNATE ARRANGEMENT OF PIPING TO BE SUBJECT TO THE APPROVAL OF THE WATERWORKS METER SECTION PRIOR TO INSTALLATION.
5. THE AREA FOR 600mm IN FRONT OF THE METER SHALL BE FREE OF OBSTRUCTION TO ALLOW FOR CONVENIENT READING AND SERVICING OF THE METER. WATER METER HEADROOM MUST BE PROVIDED IN THIS AREA.
6. METERS MUST BE INSTALLED WITHIN REASONABLE DISTANCE OF A FLOOR DRAIN. METER LOCATIONS MUST BE APPROVED BY THE WATERWORKS DIVISION.
7. EXCEPT WHERE NOTED, ALL FITTINGS AND PIPE ARE TO BE SOLDERED COPPER.
8. WHERE SOLDERED VALVES ARE BEING USED, COPPER TO FEMALE I.P.T. ADAPTERS MUST BE SUPPLIED TO ACCOMMODATE METER TAILPIECES.
9. ALL VALVES SHOWN SHALL BE FULL PORT GATE VALVES. THE MASTER CONTROL VALVE SHALL BE c/w DRAIN.
10. AN APPROVED BACKFLOW PREVENTION ASSEMBLY SHALL BE INSTALLED IMMEDIATELY AFTER THE WATER METER SETTING ON ALL COMMERCIAL AND INDUSTRIAL SERVICES.

4 WATER METER DETAIL (40 AND 50) C/W RPZ

NOT TO SCALE

This drawing has been prepared for the use of AECOM's client and may not be used, reproduced or relied upon by third parties, except as agreed by AECOM and its client, as required by law or for use by governmental reviewing agencies. AECOM accepts no responsibility, and denies any liability whatsoever, to any party that modifies this drawing without AECOM's express written consent. Do not scale this document. All measurements must be obtained from the stated dimensions.

AECOM

PROJECT

City of Brandon
Kirkcaldy Lift Station

CLIENT

City of Brandon
Brandon, Manitoba

City of BRANDON

CONSULTANT

AECOM
99 Commerce Drive
Winnipeg, Manitoba R3P 0Y7
204.477.5381 tel 204.284.2040 fax
www.aecom.com

REGISTRATION

PROVINCE OF MANITOBA
B.C. WATSON
14/12/2018
REGISTERED PROFESSIONAL ENGINEER

APEGM
Certificate of Authorization
AECOM Canada Ltd.
No. 4671 Date: 2018.12.14

ISSUE/REVISION

I/R	DATE	DESCRIPTION
1	2018.12.14	ISSUED FOR CONSTRUCTION
0	2018.07.27	ISSUED FOR TENDER

PROJECT NUMBER

60247924

SHEET TITLE

KIRKCALDY LIFT STATION
MECHANICAL
DETAILS AND SCHEMATICS

SHEET NUMBER

M-404

Project Management Initials:Designer: Designer Checked: Checker Approved: Approver ANSI D 559mm x 864mm
Last Plotted: 12/14/2018 10:54:50 AM
Filename: P:\60247924\000-CAD\01-MODELS\MDesign Files\60247924-MOD-00-M_V17_peter2.rvt
Printed on ___% Post-Consumer Recycled Content Paper

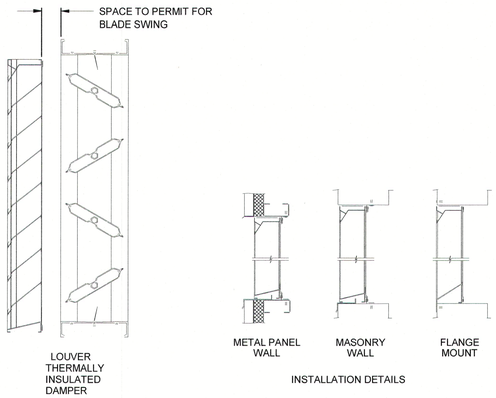

1 COMBINATION THERMAL INSULATED DAMPER WITH LOUVER

N.T.S.

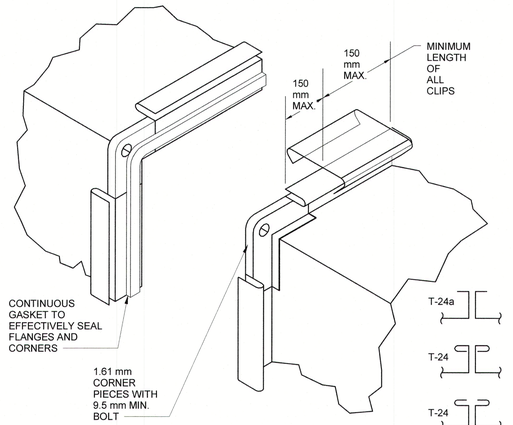

NOTES:

1. SECURELY ATTACH ADDITIONAL METAL CLIPS ON FLANGES AT 380 mm MAXIMUM CENTERS FOR 750 Pa STATIC OR LESS AND AT 300 mm MAXIMUM CENTERS FOR HIGHER PRESSURES. 0.85 mm MINIMUM.
2. CONTINUOUS CLEATS MAY BE USED.

2 SQUARE / RECTANGULAR DUCTWORK CONSTRUCTION

N.T.S.

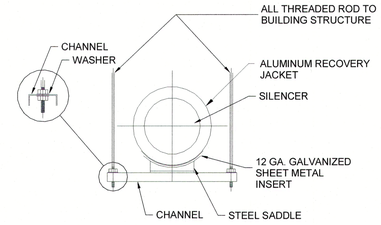

3 GENSET EXHAUST HANGER

N.T.S.

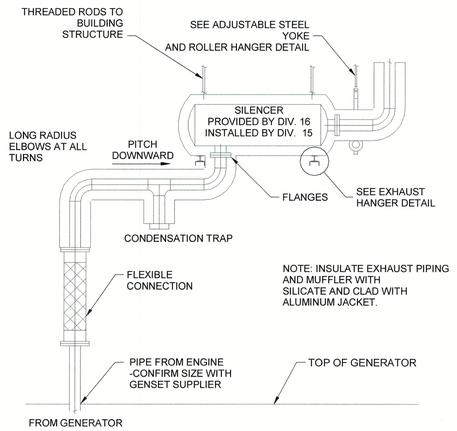

4 GENSET EXHAUST DETAIL

N.T.S.

This drawing has been prepared for the use of AECOM's client and may not be used, reproduced or relied upon by third parties, except as agreed by AECOM and its client, as required by law or by use by governmental reviewing agencies. AECOM accepts no responsibility and denies any liability whatsoever to any party that modifies this drawing without AECOM's express written consent. Do not scale this document. All measurements must be obtained from the stated dimensions

AECOM

PROJECT

City of Brandon
Kirkcaldy Lift Station

CLIENT

City of Brandon
Brandon, Manitoba

City of BRANDON

CONSULTANT

AECOM
99 Commerce Drive
Winnipeg, Manitoba R3P 0Y7
204.477.5381 tel 204.284.2040 fax
www.aecom.com

REGISTRATION

PROVINCE OF MANITOBA
B.C. WATSON
14/12/2018
REGISTERED PROFESSIONAL ENGINEER

APEGM
Certificate of Authorization
AECOM Canada Ltd.
No. 4671 Date: 2018.12.14

ISSUE/REVISION

I/R	DATE	DESCRIPTION
1	2018.12.14	ISSUED FOR CONSTRUCTION
0	2018.07.27	ISSUED FOR TENDER

PROJECT NUMBER

60247924

SHEET TITLE

KIRKCALDY LIFT STATION
MECHANICAL
HVAC DETAILS

SHEET NUMBER

M-405

Project Management Initials:Designer: Designer Checked: Checker Approved: Approver: ANSI D 559mm x 864mm
Last Plotted: 12/14/2018 10:54:51 AM
Filename: P:\60247924\000-CAD\01-MODELS\MDesign Files\60247924-MOD-00-M_V17_perez2.rvt

Printed on ___% Post-Consumer Recycled Content Paper

Project Management Initials:Designer: Designer Checked: Checker Approved: Approver ANSI D 559mm x 864mm

LEGEND

POWER

600AT
800AF
LSIG
LOW VOLTAGE POWER CIRCUIT BREAKER (LVPCB) ELECTRICALLY OPERATED
MODIFIERS: 800AF - FRAME
600AT - TRIP
LSIG - TRIP FUNCTIONS
FUNCTIONS: 100% - 100% RATED

120A
3P
LOW VOLTAGE THERMAL/MAGNETIC BREAKER
MODIFIERS: 120A - TRIP
3P - # OF POLES
LSIG - TRIP FUNCTIONS
FUNCTIONS: 100% - 100% RATED
MCP - MOTOR PROTECTOR

7A
MCP
MOTOR CIRCUIT PROTECTOR, MAGNETIC ONLY
MODIFIERS: 7A CONTINUOUS RATING. 3 POLE UNLESS OTHERWISE NOTED.

DISCONNECT PLUG/RECEPTACLE, WATER-TIGHT, RATED NEMA 4X, LISTED TO CSA STD. C22.2 NO. 182.1, EQUAL TO MELTRIC DSN60-60A, 3P & 4 PILOT CONTACTS FOR MOTORS UP TO 20HP AND DSN30-30A FOR MOTORS UP TO 7.5kW

THERMAL OVERLOAD DEVICE

CONTACT - NORMALLY OPEN

CONTACT - NORMALLY CLOSED

X
CAPACITOR C/W KVAR RATING

2
POTENTIAL TRANSFORMER C/W VOLTAGE AND QUANTITY

400/5
3
CURRENT TRANSFORMER C/W RATIO AND QUANTITY

DM
DIGITAL METERING

SPD
SURGE PROTECTION DEVICE

VFD
VARIABLE FREQUENCY DRIVE

M
UTILITY METER

ELECTRIC MOTOR

DISTRIBUTION TRANSFORMER

DELTA

WYE

WYE OR STAR WITH SOLID GROUNDED NEUTRAL

GROUND

100A
#X
DISCONNECT SWITCH
#X - NEMA RATING

STARTER - FVNR, FULL VOLTAGE NON-REVERSING

C
kVAR
CONTACTOR W/ CAPACITOR

DUPLEX RECEPTACLE

ABOVE COUNTER RECEPTACLE

DRYER RECEPTACLE

ISOLATED GROUND RECEPTACLE

SPLIT-FEED RECEPTACLE

GROUND FAULT RECEPTACLE

SPECIAL 120V RECEPTACLE

SPECIAL RECEPTACLE

SPECIAL 600V RECEPTACLE

DISCONNECT SWITCH

FUSED DISCONNECT SWITCH

COMBINATION DISCONNECT/MAGNETIC MOTOR STARTER

X
SWITCH
X=M: MOTOR RATED
X=MP: MANUAL MOTOR STARTER C/W PILOT LIGHT

PANEL BOARD - SURFACE MOUNTED

MISC. PANEL BOARD - FLUSH MOUNTED

WW
ELECTRIC HEATER

BASEBOARD HEATER

T
THERMOSTAT

LIGHTING

LED LUMINAIRE - SURFACE

LED LUMINAIRE - SUSPENDED

LED LUMINAIRE - SURFACE

EXTERIOR WALL MOUNTED

WALL MOUNTED EXIT LIGHT - ARROWS AS REQUIRED

WALL MOUNTED EXIT LIGHT WITH REMOTE HEADS

BATTERY PACK C/W HEADS AS INDICATED

WALL MOUNTED EMERGENCY REMOTE HEADS

PC
PHOTO ELECTRIC CELL

OS
OCCUPANCY SENSOR

#
LUMINAIRE TYPE

Y
LIGHTING SWITCH
Y=3: THREE WAY
Y=4: FOUR WAY
Y=D: DIMMER
Y=PL: PILOT LIGHT

COMMUNICATION

VOICE OUTLET

DATA OUTLET

VOICE/DATA OUTLET

FIRE ALARM

MANUAL PULL STATION

WALL MOUNTED HORN

WALL MOUNTED HORN/STROBE

ST
WALL MOUNTED STROBE

SMOKE DETECTOR

HEAT DETECTOR

RATE OF RISE THERMAL DETECTOR

DUCT SMOKE DETECTOR

END OF LINE RESISTOR

IM
INSULATION MODULE

SECURITY

CARD READER

DPS
DOOR POSITION SWITCH

MD
MOTION DETECTOR

PUSHBUTTON FOR DOOR BUZZER

DOOR BUZZER

K
KEYPAD

PAN/TILT/ZOOM (PTZ) CAMERA

CABLES

OVERHEAD

DIRECT BURIED

ABBREVIATIONS

AHU	AIR HANDLE UNIT
A.F.F.	ABOVE FINISHED FLOOR
ATS	AUTOMATIC TRANSFER SWITCH
BMS	BUILDING MANAGEMENT SYSTEM
BU	BATTERY CHARGER CABINET
CF	CEILING FAN/AIR CONDITIONER
CSTE	CUSTOMER SERVICE TERMINATION ENCLOSURE
DP	600V DISTRIBUTION PANEL BOARD
DCS	DISTRIBUTED CONTROL SYSTEM
DCU	DISTRIBUTED CONTROL UNIT
DN	DOWN
DRI	DIGITAL REMOTE INTERFACE
EF	EXHAUST FAN
EQ	EQUIPMENT
ETR	ELECTRICAL CABLE TRAY
FACP	FIRE ALARM CONTROL PANEL
FD	SMOKE/HEAT DETECTOR
FK	PULL STATION
FSC	FIBRE COMMUNICATIONS CABINET
FVNR	FULL VOLTAGE NON REVERSING STARTER
FVR	FULL VOLTAGE REVERSING STARTER
HN	HORN/STROBE
IR	INFRARED
ITR	INSTRUMENTATION CABLE TRAY
KB	CONTROL PANEL
LP	LIGHTING PANEL 120/208V
LCP	LIGHTING CONTROL PANEL
LSIG	LONG-TIME, SHORT-TIME, INSTANTANEOUS, GROUND FAULT TRIP BREAKER
MAU	MAKE-UP AIR UNIT
MCC	MOTOR CONTROL CENTER
MD	MOTORIZED DAMPER
mmC	MILLIMETRE CONDUIT
MP	MECHANICAL POWER PANEL 120/208V
N.C.	NORMALLY CLOSED
N.O.	NORMALLY OPEN
OH	OVERHEAD
OS	OCCUPANCY SENSOR
PMCS	POWER MANAGEMENT CONTROL SYSTEM
PP	POWER PANEL 120/208V
RTU	ROOF TOP UNIT
RR	RATE OF RISE
SPM	SMART POWER METER
SS	SOFT STARTER
SP	SECURITY PANEL
SPD	SURGE PROTECTION DEVICE
SPT	SPLITTER
SW	SWITCHBOARD
TR	TRANSFORMER
UH	UNIT HEATER
UPS	UNINTERRUPTABLE POWER SUPPLY
UX	UPS DISTRIBUTION PANEL BOARD
WP	WEATHERPROOF
XP	EXPLOSION PROOF

This drawing has been prepared for the use of AECOM's client and may not be used, reproduced or relied upon by third parties, except as agreed by AECOM and its client, as required by law or for use by governmental reviewing agencies. AECOM accepts no responsibility, and denies any liability whatsoever to any party that modifies this drawing without AECOM's express written consent. Do not scale this document. All measurements must be obtained from the stated dimensions.

AECOM

PROJECT
City of Brandon
Kirkcaldy Lift Station

CLIENT
City of Brandon
Brandon, Manitoba
City of BRANDON

CONSULTANT
AECOM
99 Commerce Drive
Winnipeg, Manitoba R3P 0Y7
204.477.5381 tel 204.284.2040 fax
www.aecom.com

REGISTRATION

PROVINCE OF MANITOBA
SADLER
Member
38812
Dec 13, 2018
REGISTERED PROFESSIONAL ENGINEER

APEGM
Certificate of Authorization
AECOM Canada Ltd.
No. 4671 Date: 2018.12.14

ISSUE/REVISION

I/R	DATE	DESCRIPTION
1	2018.12.14	ISSUED FOR CONSTRUCTION
0	2018.08.10	ISSUED FOR TENDER

PROJECT NUMBER
60247924

SHEET TITLE
KIRKCALDY LIFT STATION
ELECTRICAL
LEGEND

SHEET NUMBER
E-000

Last Plotted: 12/12/2018 2:53:53 PM
Filename: P:\60247924\000-CAD\01-MODELS\E\60247924-MOD-00-E_V17_MJPersson_aecom.rvt
Printed on ___% Post-Consumer Recycled Content Paper

Project Management Initials: Designer: ____ Checked: ____ Approved: ____ ANSI D 864mm x 559mm

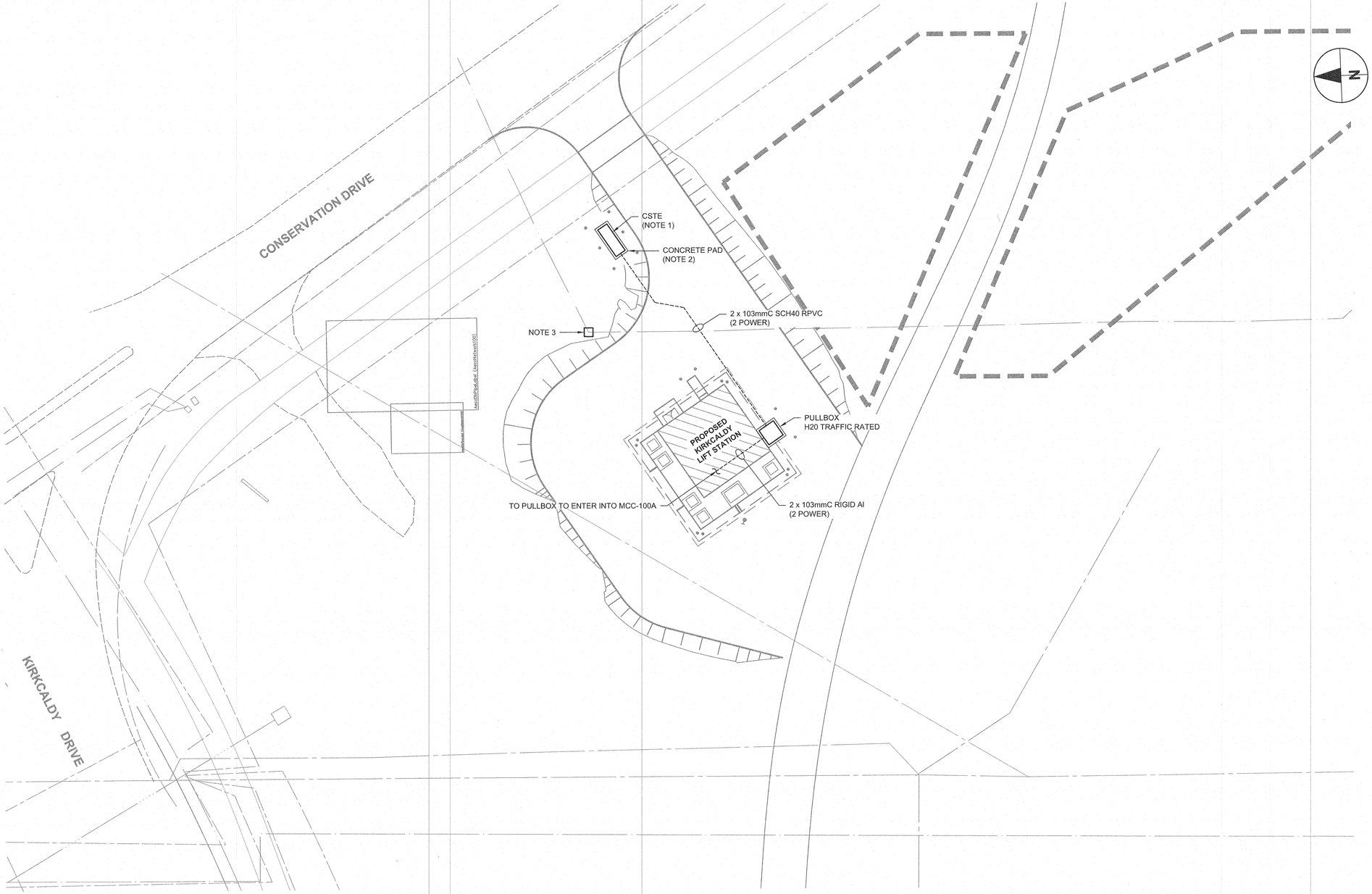

PLAN

Scale Horz. 1:250

NOTES:

1. CONTRACTOR TO PROVIDE AND INSTALL CSTE AND ALL ASSOCIATED EQUIPMENT.
2. FOR CONCRETE PAD DESIGN, REFER TO STRUCTURAL DRAWINGS.
3. LOCATION OF EXISTING FIBRE OPTIC CABLE TO BE ROUTED TO LIFT STATION AND TERMINATED IN ACCORDANCE WITH THE SPECIFICATIONS AND DRAWING 17702, ILD-009.

This drawing has been prepared for the use of AECOM's client and may not be used, reproduced or relied upon by third parties, except as agreed by AECOM and its client, as required by law or for use by governmental reviewing agencies.

AECOM

PROJECT

City of Brandon
Kirkcaldy Lift Station

CLIENT

City of Brandon
Brandon, Manitoba

City of BRANDON

CONSULTANT

AECOM
99 Commerce Drive
Winnipeg, Manitoba R3P 0Y7
204.477.5381 tel 204.284.2040 fax
www.aecom.com

REGISTRATION

PROVINCE OF MANITOBA
SADLER
Member
30812
REGISTERED PROFESSIONAL ENGINEER

APEGM
Certificate of Authorization
AECOM Canada Ltd.
No. 4671 Date: 2018.12.14

ISSUE/REVISION

1	2018.12.14	ISSUED FOR CONSTRUCTION
0	2018.08.10	ISSUED FOR TENDER
I/R	DATE	DESCRIPTION

PROJECT NUMBER

60247924

SHEET TITLE

KIRKCALDY LIFT STATION
ELECTRICAL
SITE PLAN

SHEET NUMBER

E-001

Last saved by: MOONJUNG PERSSON(2018-12-12) Last Plotted: 2018-12-12
Filename: P:\60247924\000-CAD\02-SHEETS\E60247924-SHT-30-LS-E-0001.DWG

Printed on ___% Post-Consumer Recycled Content Paper

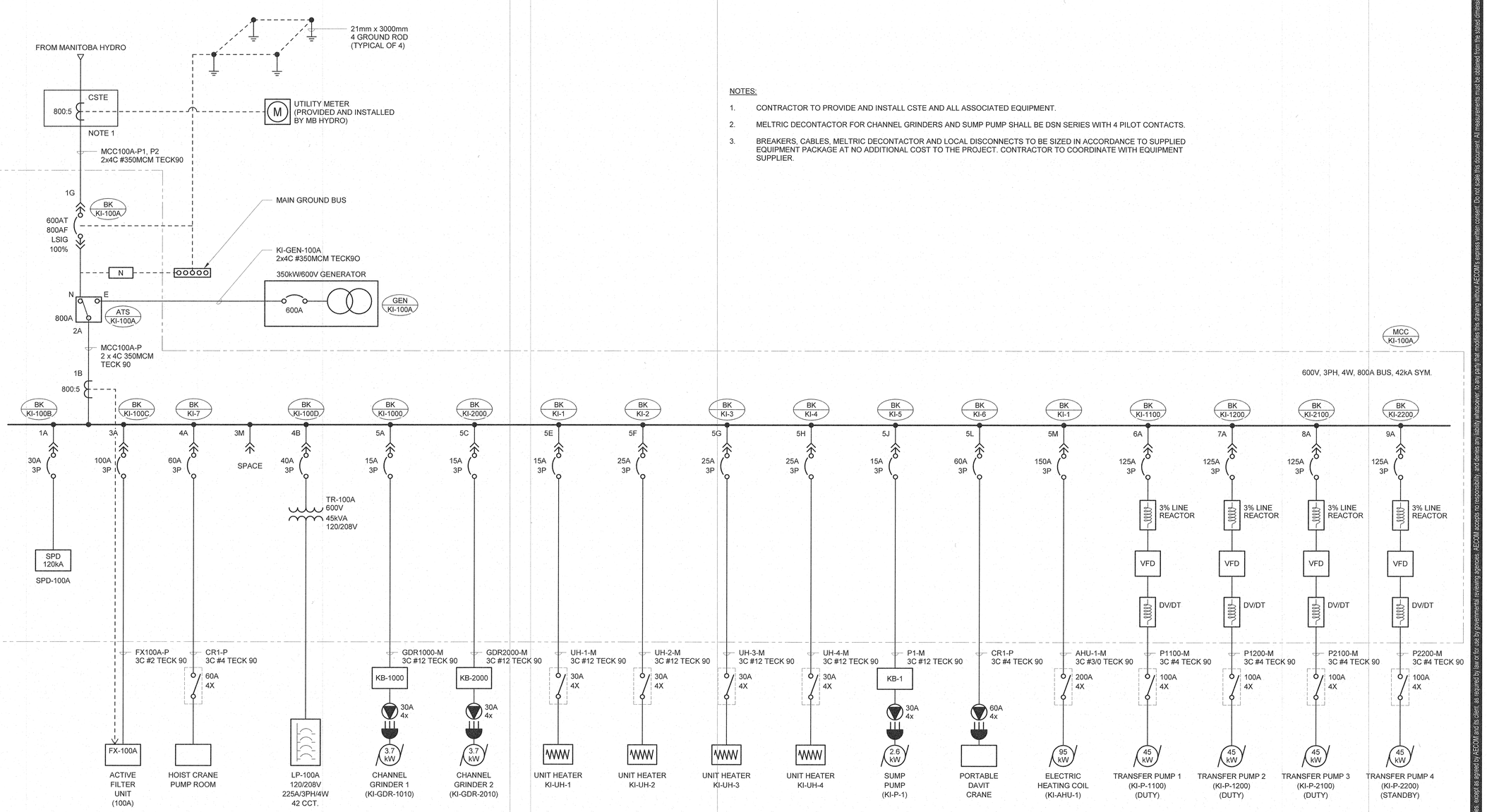

NOTES:

1. CONTRACTOR TO PROVIDE AND INSTALL CSTE AND ALL ASSOCIATED EQUIPMENT.
2. MELTRIC DECONTACTOR FOR CHANNEL GRINDERS AND SUMP PUMP SHALL BE DSN SERIES WITH 4 PILOT CONTACTS.
3. BREAKERS, CABLES, MELTRIC DECONTACTOR AND LOCAL DISCONNECTS TO BE SIZED IN ACCORDANCE TO SUPPLIED EQUIPMENT PACKAGE AT NO ADDITIONAL COST TO THE PROJECT. CONTRACTOR TO COORDINATE WITH EQUIPMENT SUPPLIER.

1 | SINGLE LINE DIAGRAM - MCC-100A

E-002 SCALE: N.T.S.

AECOM

PROJECT

City of Brandon
Kirkcaldy Lift Station

CLIENT

City of Brandon
Brandon, Manitoba

City of BRANDON

CONSULTANT

AECOM
99 Commerce Drive
Winnipeg, Manitoba R3P 0Y7
204.477.5381 tel 204.284.2040 fax
www.aecom.com

REGISTRATION

PROVINCE OF MANITOBA
S. A. SADLER
Member
30878
Dec. 13/18
REGISTERED PROFESSIONAL ENGINEER

APEGM
Certificate of Authorization
AECOM Canada Ltd.
No. 4671 Date: 2018.12.14

ISSUE/REVISION

I/R	DATE	DESCRIPTION
1	2018.12.14	ISSUED FOR CONSTRUCTION
0	2018.08.10	ISSUED FOR TENDER

PROJECT NUMBER

60247924

SHEET TITLE

KIRKCALDY LIFT STATION
ELECTRICAL
SINGLE LINE DIAGRAM
MCC-100A

SHEET NUMBER

E-002

This drawing has been prepared for the use of AECOM's client and may not be used, reproduced or relied upon by third parties, except as agreed by AECOM and its client, as required by law or for use by governmental reviewing agencies. AECOM accepts no responsibility, and denies any liability whatsoever, to any party that modifies this drawing without AECOM's express written consent. Do not scale this document. All measurements must be obtained from the stated dimensions.

Project Management Initials:Designer: Designer Checked: Checker Approved: Approver ANSI D 559mm x 864mm
Last Plotted: 12/12/2018 2:52:13 PM
Filename: P:\60247924\000-CAD\01-MODELS\E\60247924-MOD-00-E_V17_MJPersson_aecom.rvt
Printed on ___% Post-Consumer Recycled Content Paper

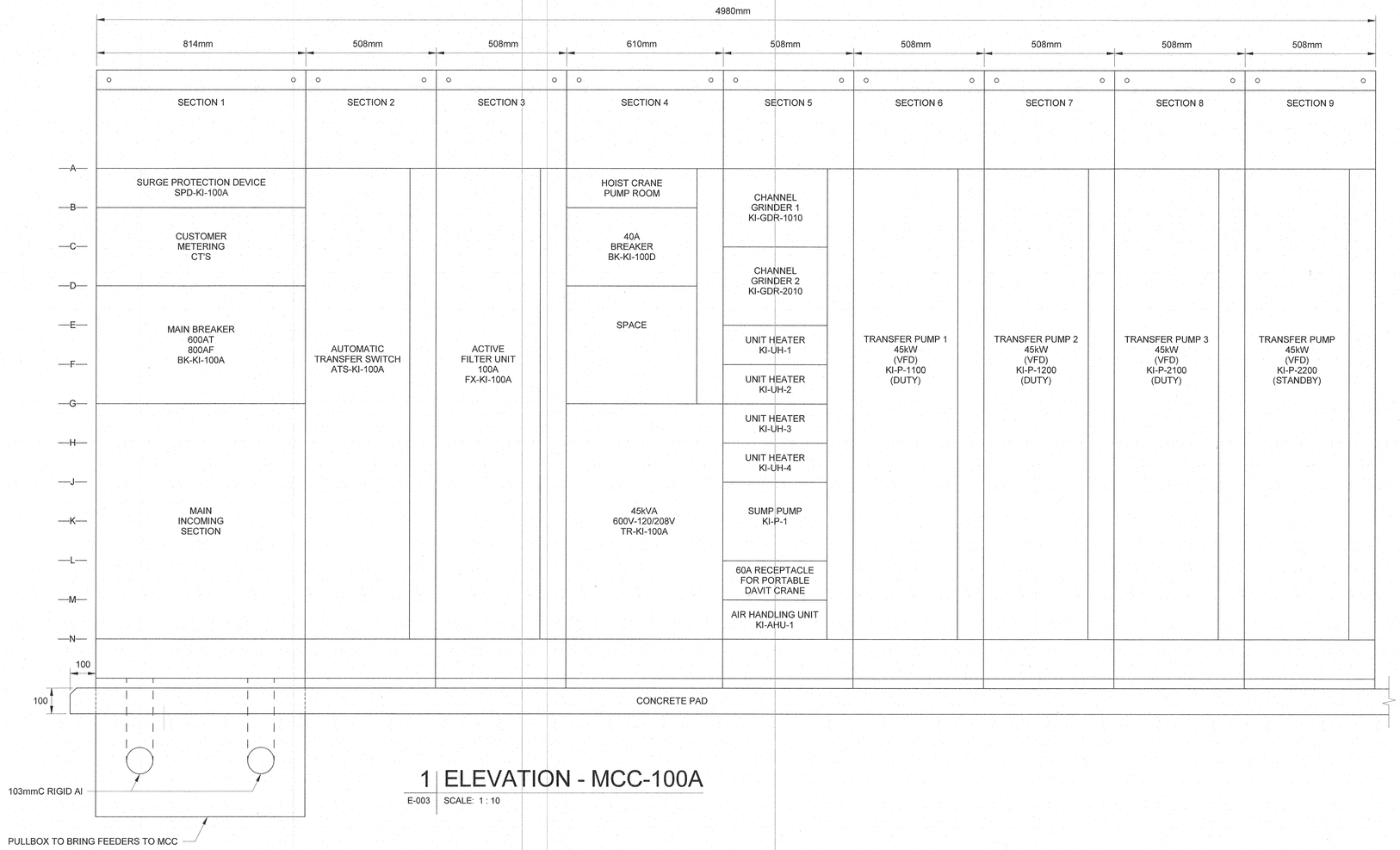

1 | ELEVATION - MCC-100A

E-003 | SCALE: 1 : 10

This drawing has been prepared for the use of AECOM's client and may not be used, reproduced or relied upon by third parties, except as agreed by AECOM and its client, as required by law or for use by governmental reviewing agencies. AECOM accepts no responsibility, and denies any liability whatsoever to any party that modifies this drawing without AECOM's express written consent. Do not scale this document. All measurements must be obtained from the stated dimensions.

AECOM

PROJECT

City of Brandon
Kirkcaldy Lift Station

CLIENT

City of Brandon
Brandon, Manitoba

City of BRANDON

CONSULTANT

AECOM
99 Commerce Drive
Winnipeg, Manitoba R3P 0Y7
204.477.5381 tel 204.284.2040 fax
www.aecom.com

REGISTRATION

PROVINCE OF MANITOBA
SADLER
Member
2018/12/13
REGISTERED PROFESSIONAL ENGINEER

APEGM
Certificate of Authorization
AECOM Canada Ltd.
No. 4671 Date: 2018.12.14

ISSUE/REVISION

I/R	DATE	DESCRIPTION
1	2018.12.14	ISSUED FOR CONSTRUCTION
0	2018.08.10	ISSUED FOR TENDER

PROJECT NUMBER

60247924

SHEET TITLE

KIRKCALDY LIFT STATION
ELECTRICAL
ELEVATION
MCC-100A

SHEET NUMBER

E-003

Project Management Initials:Designer: Designer Checked: Checker Approved: Approver ANSI D 559mm x 864mm
Last Plotted: 12/12/2018 2:54:00 PM
Filename: P:\60247924\000-CAD\01-MODELS\E\60247924-MOD-00-E_V17_MJPersson_aecom.rvt
Printed on ___% Post-Consumer Recycled Content Paper

Panel Designation: LP-100A

Location: CONTROL ROOM 100
Supply From:
Mounting: Surface
Enclosure: Type 1

Volts: 120/208 Wye
Phases: 3
Wires: 4

A.I.C. Rating: 10000 A
Mains Type: COPPER
Mains Rating: 225 A
MCB Rating: 100 A

Notes:

CKT	Circuit Description	Trip	Poles	A (kVA)	B (kVA)	C (kVA)	A (kVA)	B (kVA)	C (kVA)	Poles	Trip	Circuit Description	CKT
1	PUMP ROOM RECEPTACLES	20 A	1	0.54			0.12			1	15 A	GENERATOR ROOM LIGHTING	2
3	CONTROL ROOM RECEPTACLES	20 A	1		0.72			0.32		1	15 A	NIGHT LIGHTS	4
5	GENERATOR ROOM RECEPTACLES	20 A	1			0.54			0.40	1	30 A	DOMESTIC WATER HEATER DWH-KI-1	6
7	EXTERIOR RECEPTACLES	20 A	1	0.90			0.12			1	15 A	CONTROL ROOM LIGHTING	8
9	PLC CABINET (2CCT'S)	20 A	2		1.20			0.53		1	15 A	PUMP ROOM LIGHTING	10
11						1.20			0.35	1	15 A	EXTERIOR LIGHTING	12
13	PLC CABINET (2CCT'S)	20 A	2	0.80			0.14			1	15 A	WET WELL 1 & 2 LIGHTING	14
15					0.80			0.28		2	15 A	EXHAUST FAN EF-KI-3	16
17	CONDENSING UNIT KI-CU-1	30 A	2			3.00			0.28				18
19				3.00			0.75			2	15 A	SUPPLY FAN SF-KI-1	20
21	AIR CONDITIONER KI-AC-1	30 A	2		3.00			0.75					22
23						3.00			0.50	1	15 A	BASEBOARD HEATER KI-BB-1	24
25	TRAP PRIMER KI-TP-1	15 A	1	0.10			0.00			3	60 A	GENERATOR CONTROL PANEL	26
27	EXHAUST FAN KI-EF-1	15 A	1		0.07			0.00					28
29	EXHAUST FAN KI-EF-2	15 A	1			0.02			0.00				30
31	AHU-KI-1 SERVICE RECEPTACLE	20 A	1	0.50			0.00			1	15 A	SPARE	32
33	SPARE	15 A	1		0.00			0.00		1	15 A	SPARE	34
35	SPARE	15 A	1			0.00			0.00	1	15 A	SPARE	36
37	SPARE	20 A	1	0.00			0.00			--	--	SPACE	38
39	SPACE	--	--		0.00			0.00		--	--	SPACE	40
41	SPACE	--	--			0.00			0.01	1	15 A	EXIT SIGN	42
		Total Load:		7.0 kVA			7.7 kVA			9.3 kVA			
		Total Amps:		58.0 A			64.7 A			78.4 A			

Load Classification	Connected Load	Demand Factor	Estimated Demand	Panel Totals	
Lighting	77 VA	100.00%	77 VA		
Lighting - Dwelling Unit	560 VA	100.00%	560 VA	**Total Conn. Load:**	23916 VA
Other	10006 VA	100.00%	10006 VA	**Total Est. Demand:**	23916 VA
Receptacle	3200 VA	100.00%	3200 VA	**Total Conn.:**	66 A
Spare	10100 VA	100.00%	10100 VA	**Total Est. Demand:**	66 A

This drawing has been prepared for the use of AECOM's client and may not be used, reproduced or relied upon by third parties, except as agreed by AECOM and its client, as required by law or for use by governmental reviewing agencies. AECOM accepts no responsibility, and denies any liability whatsoever, to any party that modifies this drawing without AECOM's express written consent. Do not scale this document. All measurements must be obtained from the stated dimensions.

AECOM

PROJECT

City of Brandon
Kirkcaldy Lift Station

CLIENT

City of Brandon
Brandon, Manitoba

City of BRANDON

CONSULTANT

AECOM
99 Commerce Drive
Winnipeg, Manitoba R3P 0Y7
204.477.5381 tel 204.284.2040 fax
www.aecom.com

REGISTRATION

PROVINCE OF MANITOBA
SADLER
Member
30812
Dec 14/18
REGISTERED PROFESSIONAL ENGINEER

APEGM
Certificate of Authorization
AECOM Canada Ltd.
No. 4671 Date: 2018.12.14

ISSUE/REVISION

I/R	DATE	DESCRIPTION
1	2018.12.14	ISSUED FOR CONSTRUCTION
0	2018.08.10	ISSUED FOR TENDER

PROJECT NUMBER

60247924

SHEET TITLE

KIRKCALDY LIFT STATION
ELECTRICAL
SCHEDULE

SHEET NUMBER

E-004

Project Management Initials:Designer: Designer Checked: Checker Approved: Approver ANSI D 559mm x 864mm
Last Plotted: 12/12/2018 2:54:02 PM
Filename: P:\60247924\000-CAD\01-MODELS\IE\60247924-MOD-00-E_V17_MJPersson_aecom.rvt
Printed on ___% Post-Consumer Recycled Content Paper

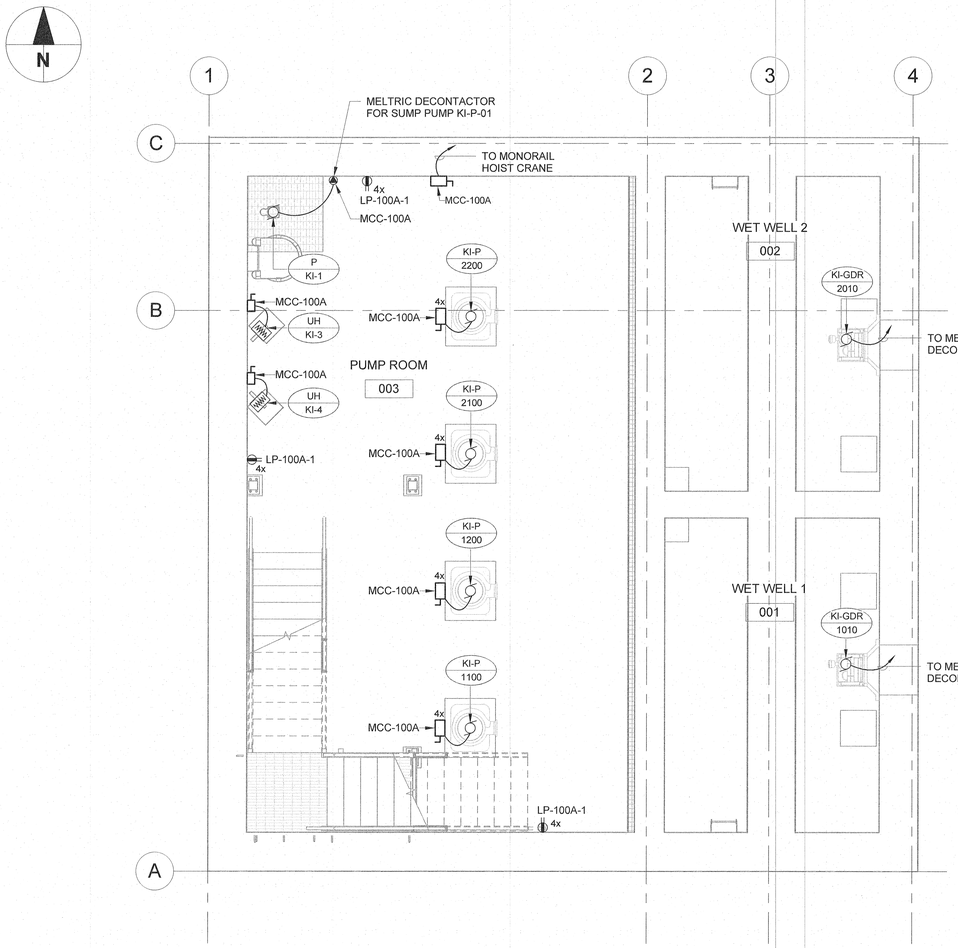

1 | LOWER LEVEL PLAN - POWER

E-101 | SCALE: 1 : 50
REF: E-104

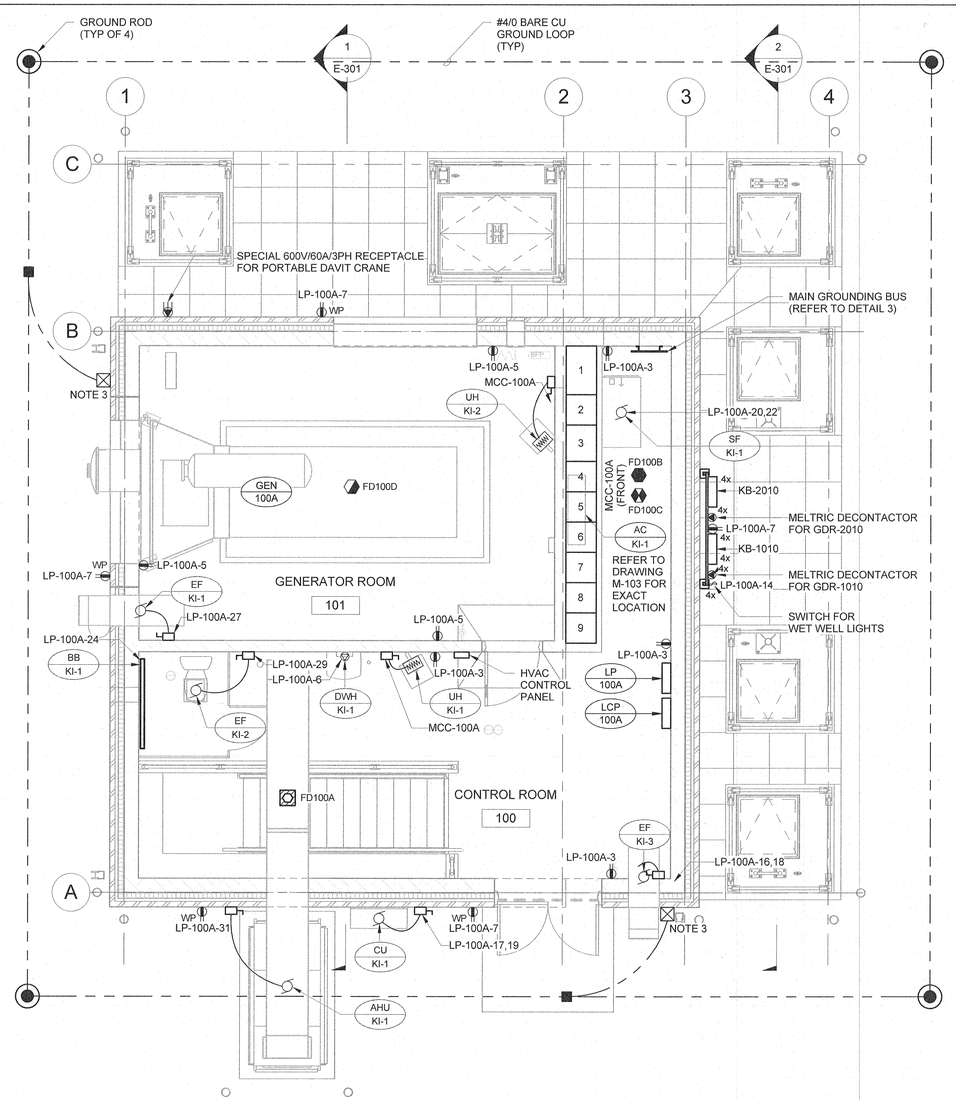

2 | MAIN LEVEL PLAN - POWER

E-101 | SCALE: 1 : 50
REF: E-301

NOTES:

1. GROUNDING AND BONDING AS PER CSA C22.1.
2. ALL INSULATED GROUND CONDUCTORS TO BE RW75 XLPE GREEN COLOURED.
3. INSTALL #4/0 BARE CU GROUND CONDUCTOR EMBEDDED WITHIN 50mm OF THE BOTTOM OF THE BUILDING FOOTING AND BOND WITH THERMOCOUPLE AT 3m SPACING (UFER GROUND).
4. ALL EQUIPMENT IN WET WELL TO BE RATED TO CLASS 1, ZONE 1.
5. ALL SMOKE AND HEAT DETECTORS TO BE WIRED TO PLC.

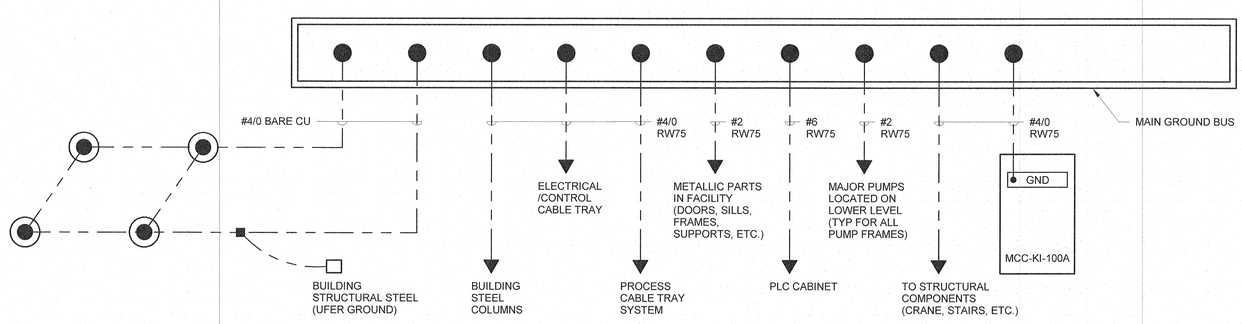

3 | MAIN GROUNDING BUS

E-101 | SCALE: N.T.S.

This drawing has been prepared for the use of AECOM's client and may not be used, reproduced or relied upon by third parties, except as agreed by AECOM and its client, as required by law or for use by governmental reviewing agencies. AECOM accepts no responsibility, and denies any liability whatsoever, to any party that modifies this drawing without AECOM's express written consent. Do not scale this document. All measurements must be obtained from the stated dimensions.

AECOM

PROJECT

City of Brandon
Kirkcaldy Lift Station

CLIENT

City of Brandon
Brandon, Manitoba

City of BRANDON

CONSULTANT

AECOM
99 Commerce Drive
Winnipeg, Manitoba R3P 0Y7
204.477.5381 tel 204.284.2040 fax
www.aecom.com

REGISTRATION

PROVINCE OF MANITOBA
SADLER
Member
30812
REGISTERED PROFESSIONAL ENGINEER

APEGM
Certificate of Authorization
AECOM Canada Ltd.
No. 4671 Date: 2018.12.14

ISSUE/REVISION

I/R	DATE	DESCRIPTION
1	2018.12.14	ISSUED FOR CONSTRUCTION
0	2018.08.10	ISSUED FOR TENDER

PROJECT NUMBER

60247924

SHEET TITLE

KIRKCALDY LIFT STATION
ELECTRICAL
MAIN & LOWER LEVEL
POWER

SHEET NUMBER

E-101

Project Management Initials:Designer: Designer Checked: Checker Approved: Approver ANSI D 559mm x 864mm
Last Plotted: 12/12/2018 2:54:08 PM
Filename: P:\60247924\000-CAD\01-MODELS\E\60247924-MOD-00-E_V17_MJPersson_aecom.rvt
Printed on ___% Post-Consumer Recycled Content Paper

Project Management Initials:Designer: Designer Checked: Checker Approved: Approver ANSI D 559mm x 864mm

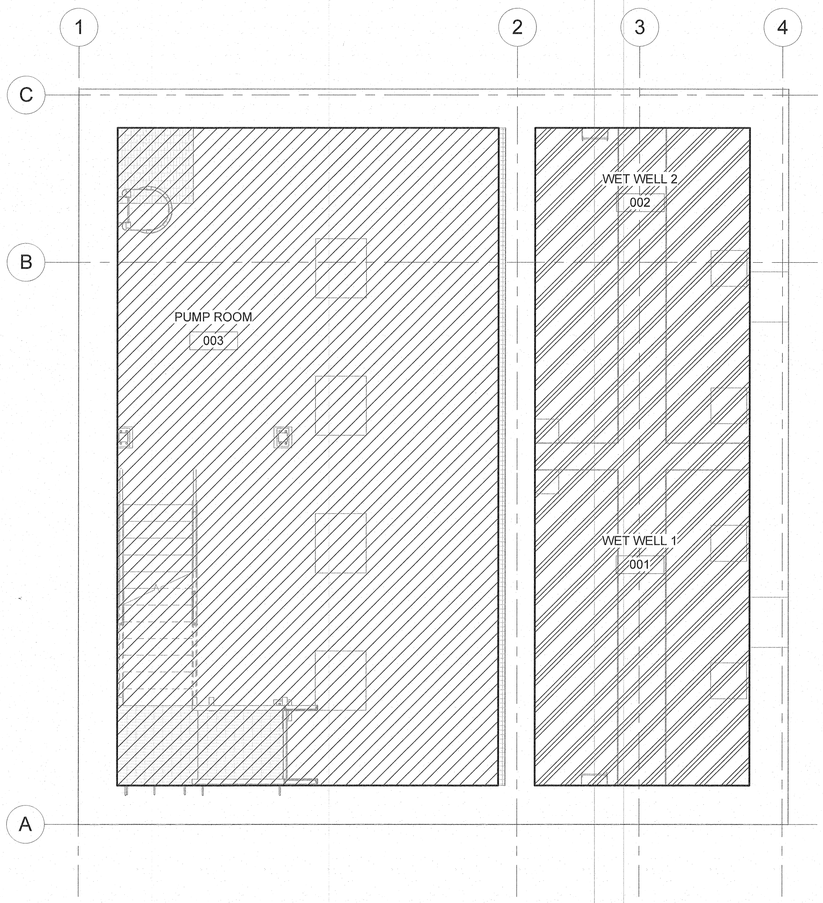

1 | LOWER LEVEL PLAN - CATEGORY

E-102 | SCALE: 1 : 50
REF: E-104

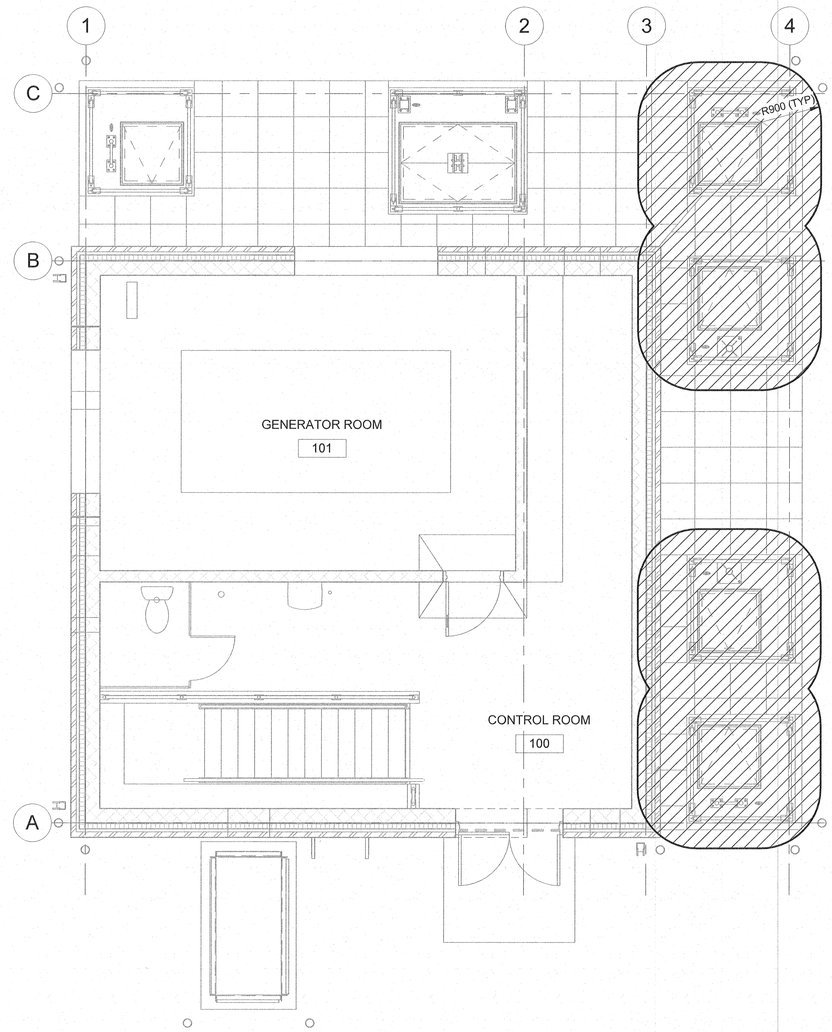

2 | MAIN LEVEL PLAN - CATEGORY

E-102 | SCALE: 1 : 50
REF: E-301

CLASSIFICATION LEGEND

- CATEGORY 2
- CLASS 1, ZONE 1
- CLASS 1, ZONE 2
- UNCLASSIFIED AREA

NOTES:

1. THE UNHATCHED AREAS ARE ORDINARY LOCATIONS.
2. AREA CLASSIFICATION AS PER SECTION 18 AND 22 OF THE LATEST EDITION CANADIAN ELECTRICAL CODE.

This drawing has been prepared for the use of AECOM's client and may not be used, reproduced or relied upon by third parties, except as agreed by AECOM and its client, as required by law or for use by governmental reviewing agencies. AECOM accepts no responsibility, and denies any liability whatsoever, to any party that modifies this drawing without AECOM's express written consent. Do not scale this document. All measurements must be obtained from the stated dimensions.

AECOM

PROJECT

City of Brandon
Kirkcaldy Lift Station

CLIENT

City of Brandon
Brandon, Manitoba

City of BRANDON

CONSULTANT

AECOM
99 Commerce Drive
Winnipeg, Manitoba R3P 0Y7
204.477.5381 tel 204.284.2040 fax
www.aecom.com

REGISTRATION

PROVINCE OF MANITOBA
SADLER
Member
30812
REGISTERED PROFESSIONAL ENGINEER

APEGM
Certificate of Authorization
AECOM Canada Ltd.
No. 4671 Date: 2018.12.14

ISSUE/REVISION

I/R	DATE	DESCRIPTION
1	2018.12.14	ISSUED FOR CONSTRUCTION
0	2018.08.10	ISSUED FOR TENDER

PROJECT NUMBER

60247924

SHEET TITLE

KIRKCALDY LIFT STATION
ELECTRICAL
CLASSIFICATION

SHEET NUMBER

E-102

Last Plotted: 12/12/2018 2:54:13 PM
Filename: P:\60247924\000-CAD\01-MODELS\E\60247924-MOD-00-E_V17_MJPersson_aecom.rvt

Printed on ___% Post-Consumer Recycled Content Paper

Project Management Initials:Designer: Designer Checked: Checker Approved: Approver ANSI D 559mm x 864mm

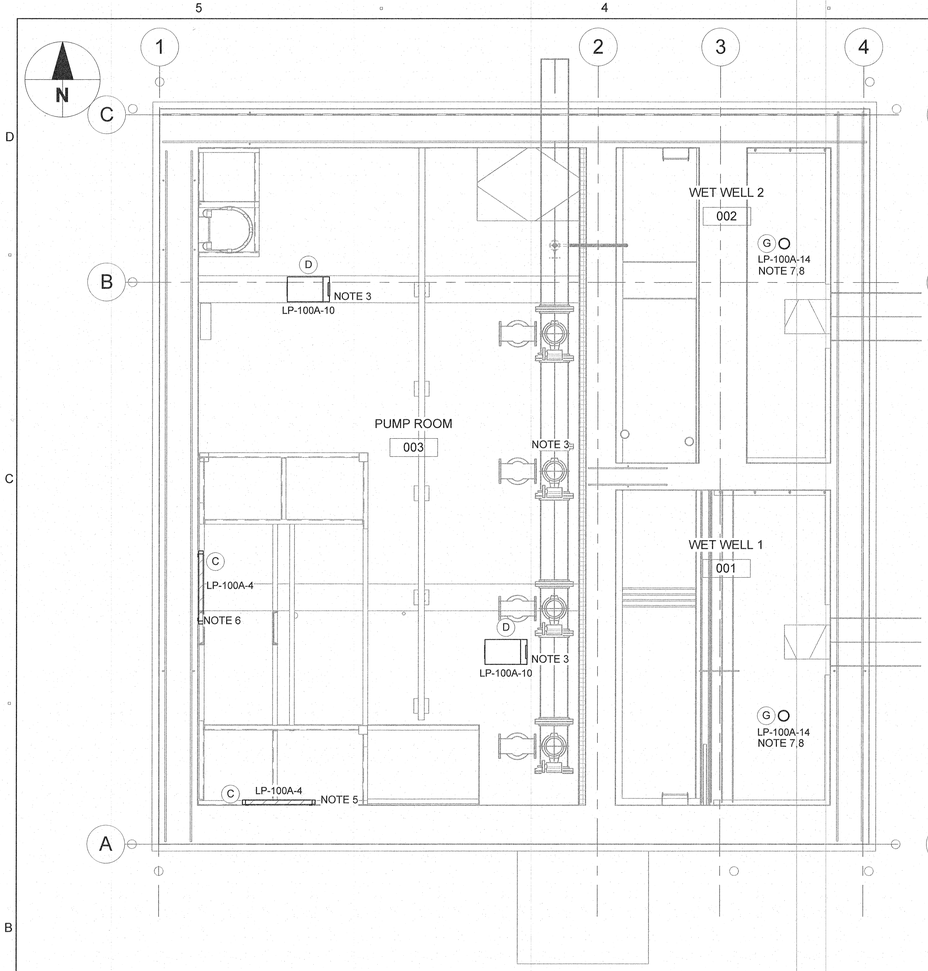

1 | LOWER LEVEL PLAN - LIGHTING

E-103 | SCALE: 1 : 50
REF: E-104

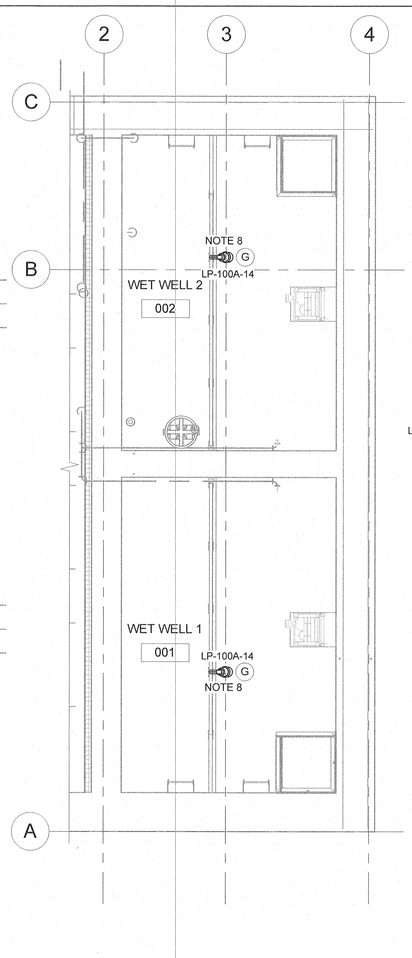

2 | LOW PLATFORM- LIGHTING

E-103 | SCALE: 1 : 50
REF: E-301

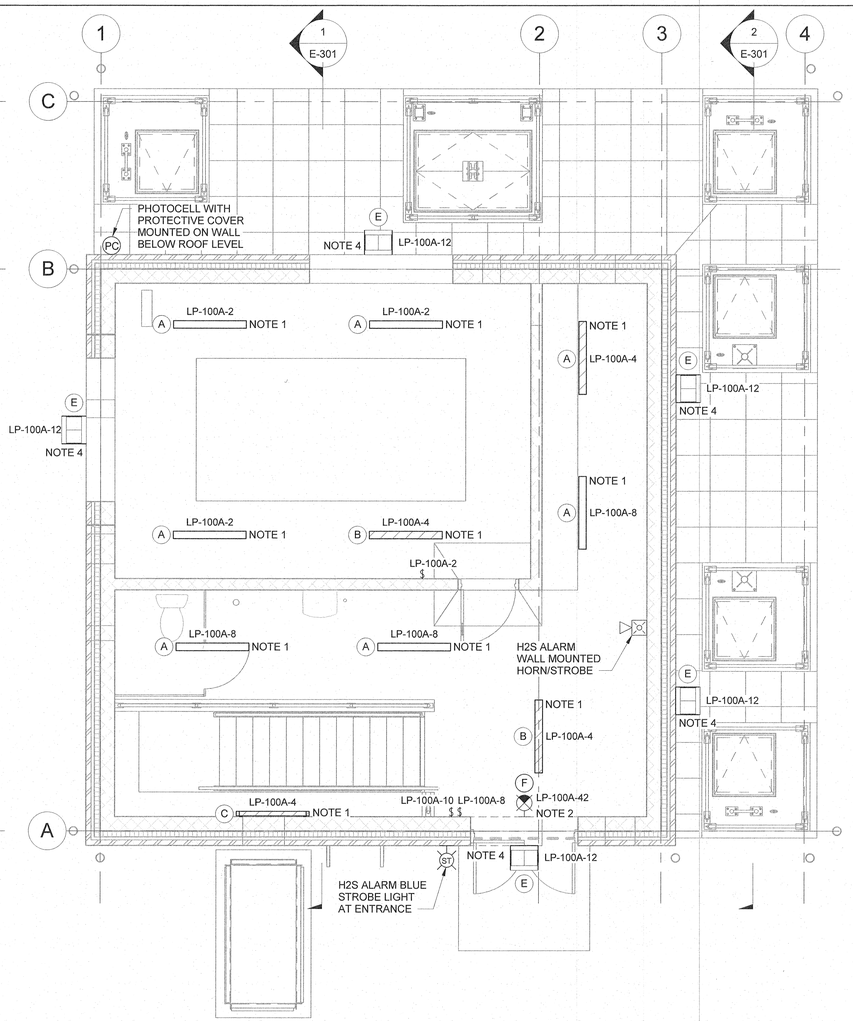

3 | MAIN LEVEL PLAN - LIGHTING

E-103 | SCALE: 1 : 50
REF: E-301

LUMINAIRE SCHEDULE

LABEL	VOLTS	LAMPS/TYPE	DESCRIPTION	MANUFACTURER CATALOG NUMBER	MOUNTING	REMARKS
A	UNIV. 120V-277V	44W, LED 4000K 92CRI	1220 mm LED FIXTURE, 22 GAUGE STEEL PREPAINTED WHITE WITH ACRYLIC LENS.	CREE: LS4-40L-40K-10V	SURFACE	DIMMING 0-10V.
B	UNIV. 120V-277V	44W, LED 4000K 92CRI	1220 mm LED FIXTURE, 22 GAUGE STEEL PREPAINTED WHITE WITH ACRYLIC LENS AND 90 MINUTE BATTERY BACK-UP.	CREE: LS4-40L-40K-EB14	SURFACE	DIMMING 0-10V WITH EB14 BATTERY BACK-UP.
C	UNIV. 120V-277V	63W, LED	69 mm x 1329mm LED WET AND CORROSIVE LINEAR FIXTURE SUITABLE FOR INDOOR AND OUTDOOR APPLICATIONS AND 90 MINUTE BATTERY BACK-UP.	EATON: PLL4/UNV1-S903-TF-EB14	SURFACE	IP65 RATED ENCLOSURE, SUITABLE FOR WET AND CORROSIVE LOCATIONS. TO BE SUSPENDED VIA CEILING WITH DP1053MTK BRACKETS AND COMES WITH EB14 BATTERY BACK-UP.
D	UNIV. 120V-277V	267W LED 5000k	LED HIGH BAY FIXTURE WITH PRECISE OPTICAL CONTROL AND 1.8 m CORD.	CREE: HBY-EHO-HH-DM-12-E-UL-SV-700-50K	SURFACE (CEILING)	FIXTURE MOUNTS DIRECTLY TO SOLID SURFACE WITH GALVANIZED STEEL MOUNTING BRACKETS C/W 1.8m CORD FOR CONNECTING TO CONTRACTOR SUPPLIED JUNCTION BOXES
E	UNIV. 120V-277V	70W, LED 4000K	WALL PACK LED, CAST ALUMINUM FIXTURE, WEATHERTIGHT, WITH DRIVER AND HEAT SINKS.	CREE: SEC-EDG-3MB-WM-04-E-UL-BK-525	WALL	OUTDOOR WALL MOUNTED C/W LIGHTWEIGHT MOUNTING BOX. SECURE TO WALL WITH 4 - 5mm SCREWS.
F	120V	LED	PICTOGRAM EXIT SIGN. ONE PIECE ALUMINUM HOUSING. CSA 22.2 NO. 141-10 CERTIFIED	THOMAS & BETTS: LA-1-G-S-TP	WALL	FOR UNCLASSIFIED AREA. UNIVERSAL MOUNT ON THE WALL.
G	UNIV. 120V-277V	36W, LED	STANCHION/CEILING MOUNTED LED, HAZARDOUS RATED SUITABLE FOR CLASS 1, ZONE 1	EATON: STANCHION - EVLEDJ4C701 CEILING - EVLEDCX3C701	STANCHION/ CEILING MOUNT	STANCHION (31.75mm) AND CEILING MOUNTED FIXTURE SUITABLE FOR HAZARDOUS LOCATION CLASS 1, ZONE 1, GROUP IIB AND WET LOCATIONS, TYPE 4x AND IP66.

NOTES:

1. LIGHTING FIXTURE TO BE MOUNTED 2800mm A.F.F. FIELD ADJUST AS REQUIRED.
2. LIGHTING FIXTURE TO BE MOUNTED 300mm ABOVE DOOR FRAME.
3. LIGHTING FIXTURE TO BE MOUNTED 7000mm A.F.F. FIELD ADJUST AS REQUIRED.
4. LIGHTING FIXTURE TO BE MOUNTED 3000mm A.F.F. FIELD ADJUST AS REQUIRED.
5. LIGHTING FIXTURE TO BE MOUNTED 1750mm A.F.F. FIELD ADJUST AS REQUIRED.
6. LIGHTING FIXTURE TO BE MOUNTED 3220mm A.F.F. FIELD ADJUST AS REQUIRED.
7. LIGHTING FIXTURE TO BE MOUNTED 5526mm A.F.F. FIELD ADJUST AS REQUIRED.
8. REFER TO SECTION 2 ON DRAWING E301 FOR INSTALLATION LAYOUT.

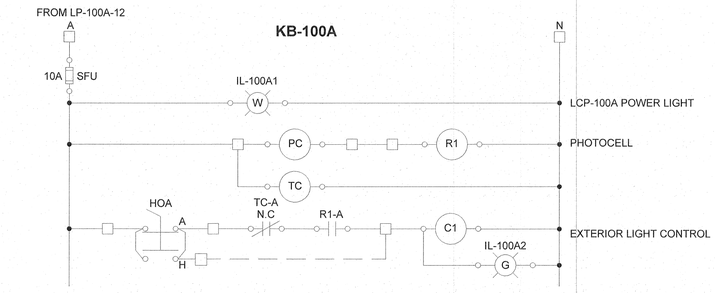

LEGEND:

PC	-	PHOTOCELL	☐	- PANEL TERMINALS
TC	-	ASTRONOMICAL TIME CLOCK	☒	- FIELD CONNECTION
R#	-	RELAYS (RELAYS TO BE ALLEN BRADLEY "BULLETIN-700M" OR EQUIVALENT)		
C3	-	CONTACTORS (120V LIGHTING CONTACTORS TO BE ALLEN-BRADLEY "BULLETIN-500L" OR EQUIVALENT)		

4 | WIRING DIAGRAM

E-103 | SCALE: N.T.S.

This drawing has been prepared for the use of AECOM's client and may not be used, reproduced or relied upon by third parties, except as agreed by AECOM and its client, as required by law or for use by governmental reviewing agencies. AECOM accepts no responsibility, and denies any liability whatsoever to any party that modifies this drawing without AECOM's express written consent. Do not scale this document. All measurements must be obtained from the stated dimensions.

AECOM

PROJECT

City of Brandon
Kirkcaldy Lift Station

CLIENT

City of Brandon
Brandon, Manitoba

City of BRANDON

CONSULTANT

AECOM
99 Commerce Drive
Winnipeg, Manitoba R3P 0Y7
204.477.5381 tel 204.284.2040 fax
www.aecom.com

REGISTRATION

PROVINCE OF MANITOBA
SADLER
December 18
30812
REGISTERED PROFESSIONAL ENGINEER

APEGM
Certificate of Authorization
AECOM Canada Ltd.
No. 4671 Date: 2018.12.14

ISSUE/REVISION

I/R	DATE	DESCRIPTION
1	2018.12.14	ISSUED FOR CONSTRUCTION
0	2018.08.10	ISSUED FOR TENDER

PROJECT NUMBER

60247924

SHEET TITLE

KIRKCALDY LIFT STATION
ELECTRICAL
MAIN & LOWER LEVEL
LIGHTING

SHEET NUMBER

E-103

Last Plotted: 12/12/2018 2:54:19 PM
Filename: P:\60247924\000-CAD\01-MODELS\E\60247924-MOD-00-E_V17_MJPersson_aecom.rvt

Printed on ____% Post-Consumer Recycled Content Paper

Project Management Initials:Designer: Designer Checked: Checker Approved: Approver ANSI D 559mm x 864mm

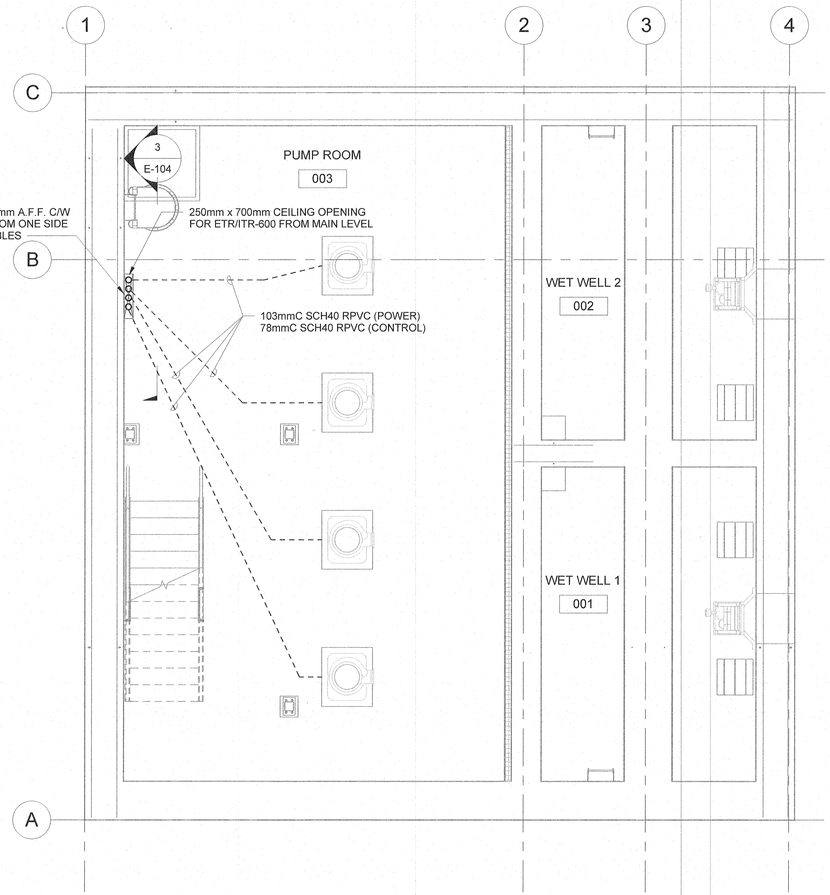

1 | LOWER LEVEL PLAN - CABLE TRAY

E-104 | SCALE: 1 : 50
REF: E-104

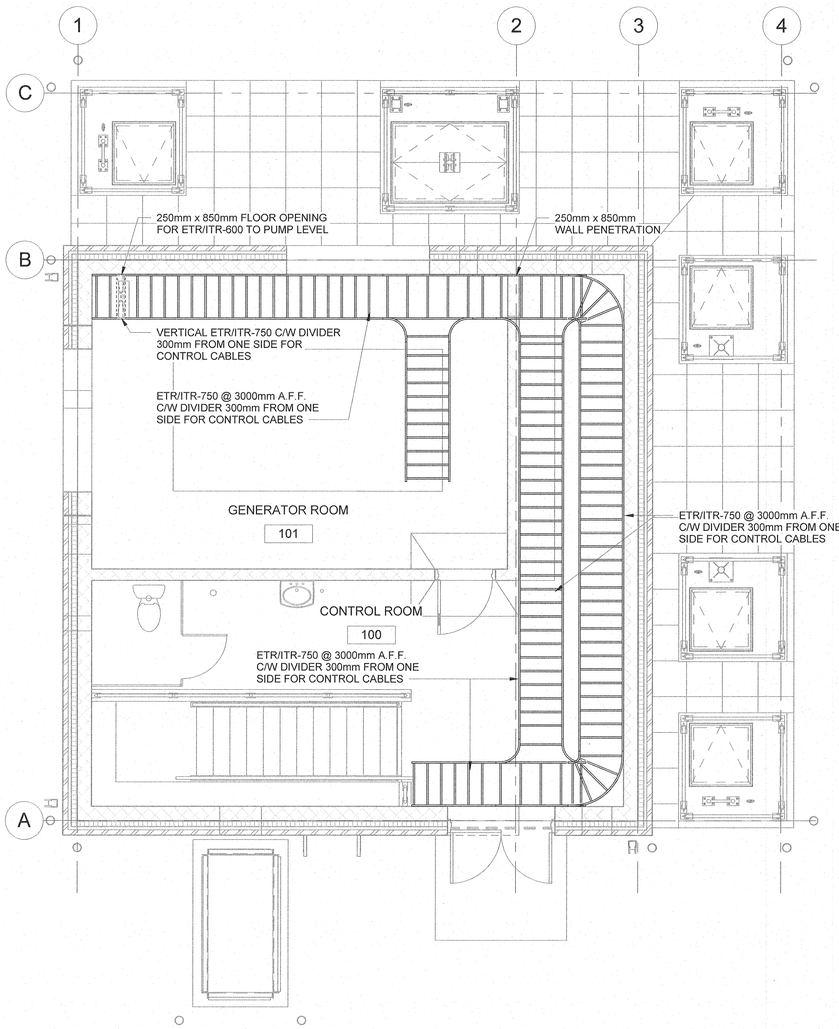

2 | MAIN LEVEL PLAN - CABLE TRAY

E-104 | SCALE: 1 : 50
REF: E-301

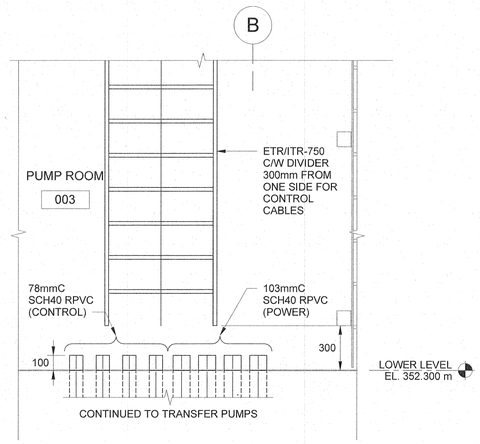

3 | CABLE TRAY & CONDUIT DETAIL

E-104 | SCALE: 1 : 20
REF: E-104

This drawing has been prepared for the use of AECOM's client and may not be used, reproduced or relied upon by third parties, except as agreed by AECOM and its client, as required by law or for use by governmental reviewing agencies. AECOM accepts no responsibility, and denies any liability whatsoever to any party that modifies this drawing without AECOM's express written consent. Do not scale this document. All measurements must be obtained from the stated dimensions.

AECOM

PROJECT

City of Brandon
Kirkcaldy Lift Station

CLIENT

City of Brandon
Brandon, Manitoba

City of BRANDON

CONSULTANT

AECOM
99 Commerce Drive
Winnipeg, Manitoba R3P 0Y7
204.477.5381 tel 204.284.2040 fax
www.aecom.com

REGISTRATION

PROVINCE OF MANITOBA
SADLER
Member
39812
REGISTERED PROFESSIONAL ENGINEER
December 18

APEGM
Certificate of Authorization
AECOM Canada Ltd.
No. 4671 Date: 2018.12.14

ISSUE/REVISION

I/R	DATE	DESCRIPTION
1	2018.12.14	ISSUED FOR CONSTRUCTION
0	2018.08.10	ISSUED FOR TENDER

PROJECT NUMBER

60247924

SHEET TITLE

KIRKCALDY LIFT STATION
ELECTRICAL
MAIN & LOWER LEVEL
CABLE TRAY

SHEET NUMBER

E-104

Last Plotted: 12/12/2018 2:54:24 PM
Filename: P:\60247924\000-CAD\01-MODEL\SIE\60247924-MOD-00-E_V17_MJPersson_aecom.rvt
Printed on ___% Post-Consumer Recycled Content Paper

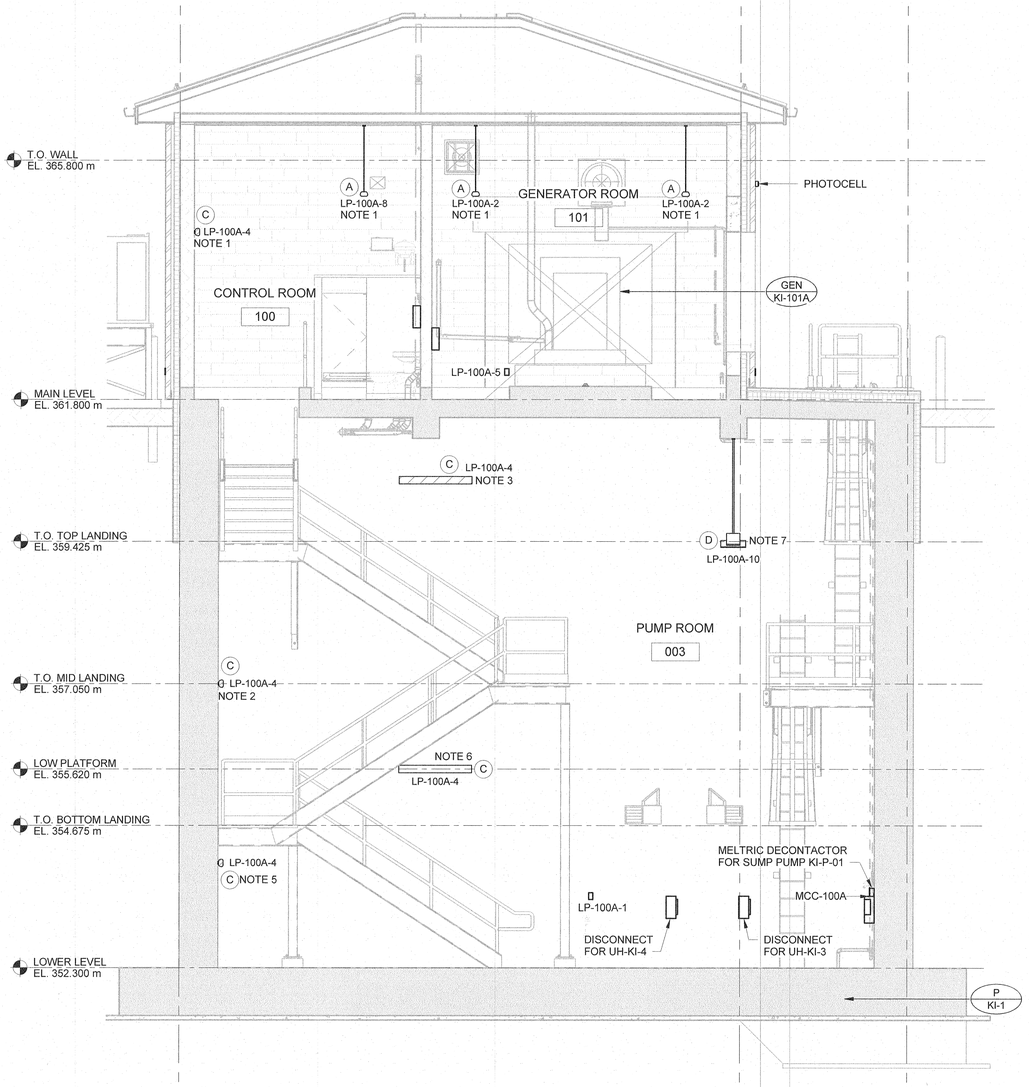

1 SECTION - PUMP ROOM

E-301 | SCALE: 1 : 50
REF: E-101

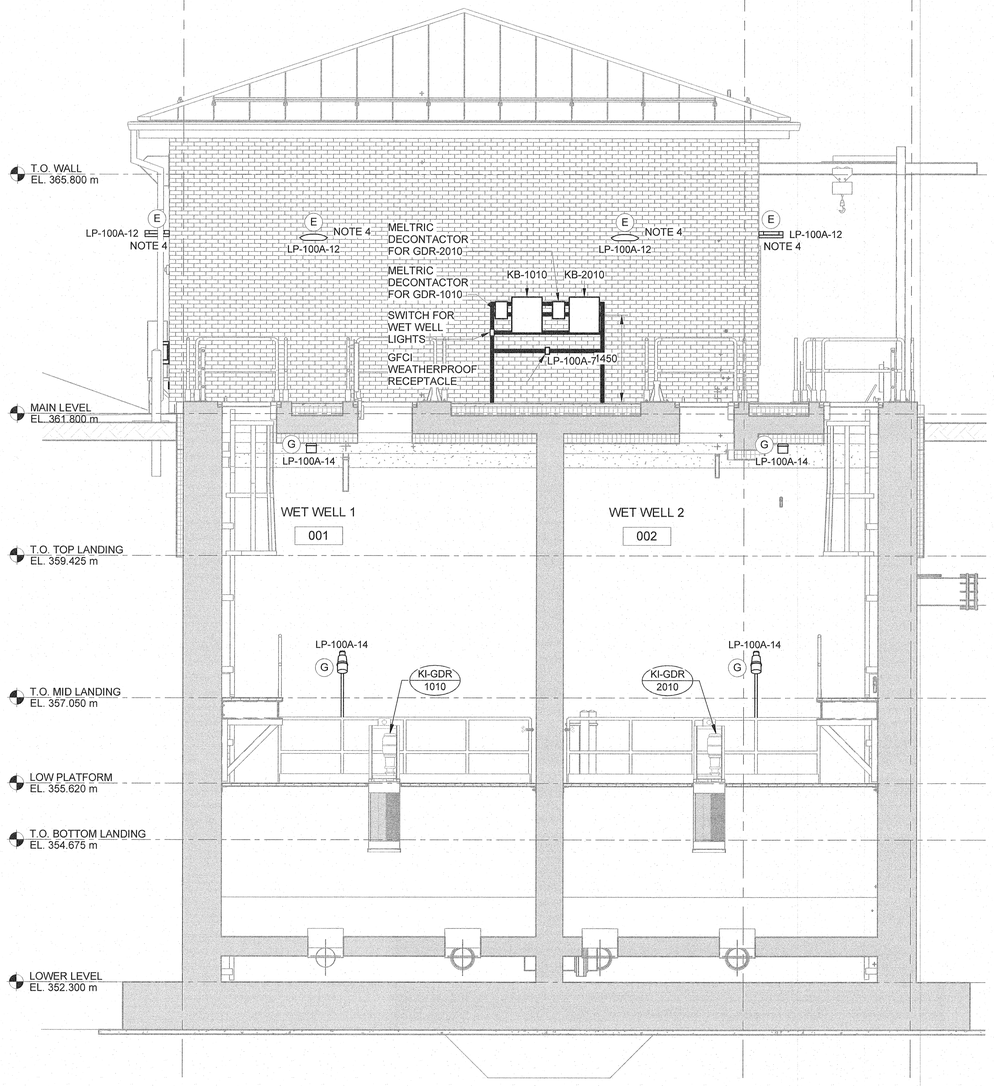

2 SECTION - WET WELL

E-301 | SCALE: 1 : 50
REF: E-101

NOTES:

1. LIGHTING FIXTURE TO BE MOUNTED 2800mm A.F.F. FIELD ADJUST AS REQUIRED.
2. LIGHTING FIXTURE TO BE MOUNTED 4750mm A.F.F. FIELD ADJUST AS REQUIRED.
3. LIGHTING FIXTURE TO BE MOUNTED 8150mm A.F.F. FIELD ADJUST AS REQUIRED.
4. LIGHTING FIXTURE TO BE MOUNTED 3000mm A.F.F. FIELD ADJUST AS REQUIRED.
5. LIGHTING FIXTURE TO BE MOUNTED 1750mm A.F.F. FIELD ADJUST AS REQUIRED.
6. LIGHTING FIXTURE TO BE MOUNTED 3320mm A.F.F. FIELD ADJUST AS REQUIRED.
7. LIGHTING FIXTURE TO BE MOUNTED 7000mm A.F.F. FIELD ADJUST AS REQUIRED.

AECOM

PROJECT

City of Brandon
Kirkcaldy Lift Station

CLIENT

City of Brandon
Brandon, Manitoba

CONSULTANT

AECOM
99 Commerce Drive
Winnipeg, Manitoba R3P 0Y7
204.477.5381 tel 204.284.2040 fax
www.aecom.com

REGISTRATION

PROVINCE OF MANITOBA
SADLER
Member
30812
Dec 14/18
REGISTERED PROFESSIONAL ENGINEER

APEGM
Certificate of Authorization
AECOM Canada Ltd.
No. 4671 Date: 2018.12.14

ISSUE/REVISION

I/R	DATE	DESCRIPTION
1	2018.12.14	ISSUED FOR CONSTRUCTION
0	2018.08.10	ISSUED FOR TENDER

PROJECT NUMBER

60247924

SHEET TITLE

KIRKCALDY LIFT STATION
ELECTRICAL
SECTIONS

SHEET NUMBER

E-301

This drawing has been prepared for the use of AECOM's client and may not be used, reproduced or relied upon by third parties, except as agreed by AECOM and its client, as required by law or for use by governmental reviewing agencies. AECOM accepts no responsibility, and denies any liability whatsoever, to any party that modifies this drawing without AECOM's express written consent. Do not scale this document. All measurements must be obtained from the stated dimensions.

Project Management Initials:Designer: Designer Checked: Checker Approved: Approver ANSI D 559mm x 864mm
Last Plotted: 12/12/2018 2:54:33 PM
Filename: P:\60247924\000-CAD\01-MODELS\E\60247924-MOD-00-E_V17_MJPersson_aecom.rvt
Printed on ____% Post-Consumer Recycled Content Paper

Project Management Initials: Designer: Checked: Approved: ANSI D 864mm x 559mm

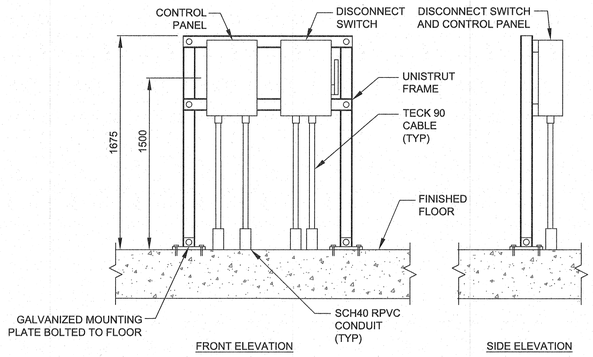

101 | TYPICAL PANEL MOUNTING DETAIL
STD — N.T.S.

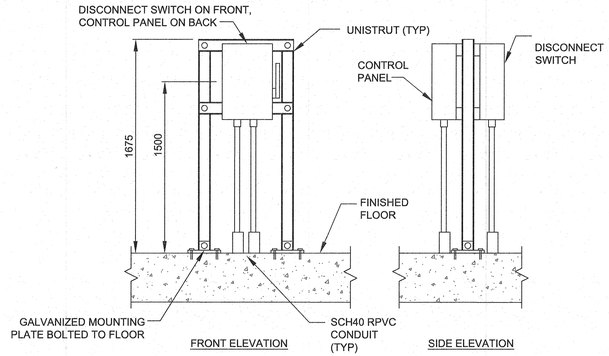

102 | TYPICAL PANEL MOUNTING DETAIL
STD — N.T.S.

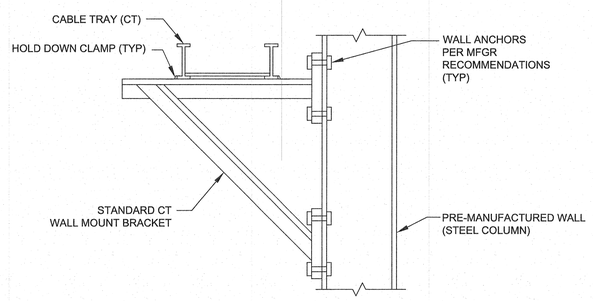

202 | TYPICAL WALL MOUNTED CABLE TRAY DETAIL
STD — N.T.S.

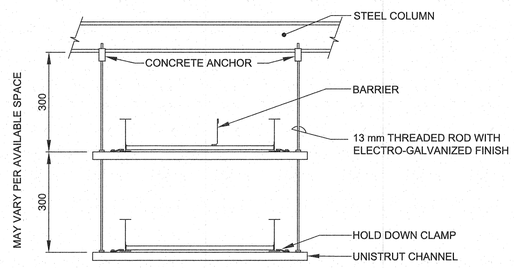

204 | TYPICAL CEILING MOUNTED CABLE TRAY DETAIL
STD — N.T.S.

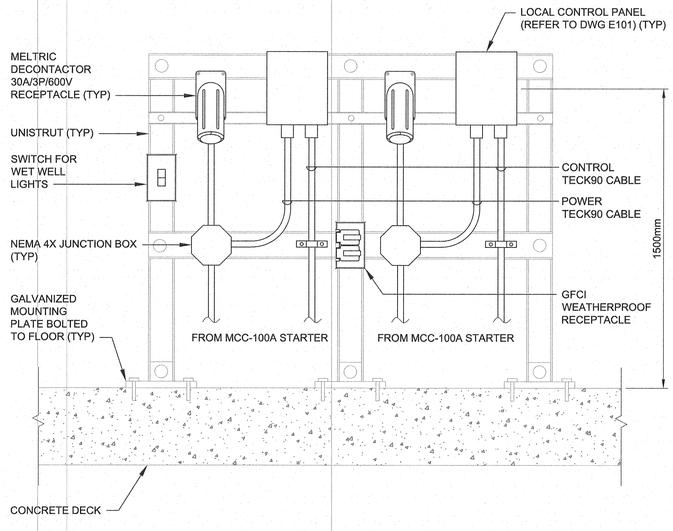

103 | TYPICAL LOCAL CONTROL STATION DETAIL
STD — N.T.S.

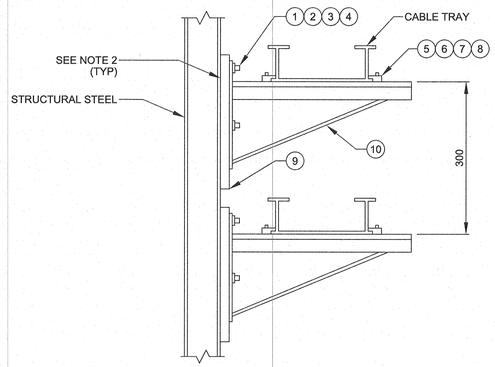

NOTES:
1. STRUT CHANNEL SHALL BE WELDED ON BOTH SIDES TO COLUMN.
2. MAXIMUM SUPPORT SPACING IS 6.0 m.

ITEM	QUANTITY	DESCRIPTION
1	4	CAP SCREW HEX HEAD BOLT (STAINLESS STEEL)
2	4	LOCK WASHER, (STAINLESS STEEL)
3	4	FLAT WASHER, (STAINLESS STEEL)
4	4	SPRING NUT, (ZINC PLATED)
5	4	HOLD DOWN CLAMP/EXPANSION GUIDE (ALUM.)
6	4	CAP SCREW HEX HEAD BOLT (STAINLESS STEEL)
7	4	FLAT WASHER, (STAINLESS STEEL)
8	4	SPRING NUT, (ZINC PLATED)
9	AS REQ'D	STRUT CHANNEL (HDG)
10	2	REINFORCED CANTILEVER BRACKET (HDG)

203 | TYPICAL STACKED CABLE TRAY MOUNTING
STD — N.T.S.

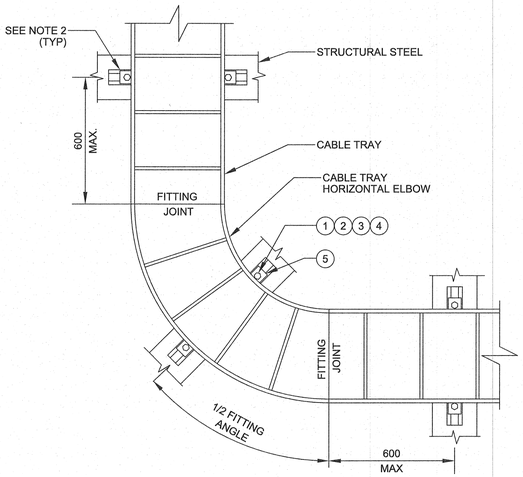

NOTES:
1. STRUT CHANNEL SHALL BE WELDED ON BOTH SIDES TO BEAM.
2. BOLT HEADS SHALL BE LOCATED INSIDE TRAY.
3. REFER TO LAYOUT DRAWINGS FOR SIZE AND RADIUS OF HORIZONTAL ELBOW.

ITEM	QUANTITY	DESCRIPTION
1	6	HOLD DOWN CLAMP/EXPANSION GUIDE (ALUM.)
2	6	CAP SCREW HEX HEAD BOLT (STAINLESS STEEL)
3	6	FLAT WASHER (STAINLESS STEEL)
4	6	SPRING NUT (ZINC PLATED)
5	AS REQ'D	STRUT CHANNEL (HDG)

201 | TYPICAL TRAY BEND INSTALLATION
STD — N.T.S.

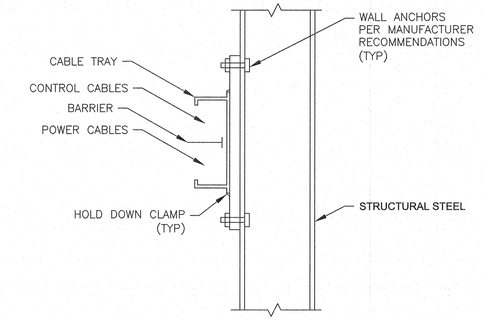

205 | TYPICAL STRUCTURAL COLUMN MOUNTED CABLE TRAY DETAIL
STD — N.T.S.

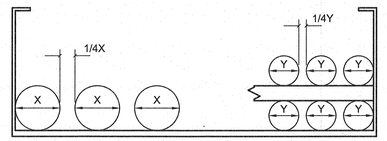

NOTES:
1. MAINTAIN MINIMUM 25% SPACING BETWEEN CABLE IN POWER CABLE TRAYS FOR 82% AMPACITY RATING AS PER THE LATEST EDITION OF THE CANADIAN ELECTICAL CODE. WHERE CABLE IN THE CABLE TRAYS REQUIRE TO BE STACKED MAINTAIN MINIMUM 100% SPACING OF THE LARGEST CABLE.
2. IN GENERAL ALL FEEDERS SHALL BE TECK CABLE RUN IN TRAY. WHERE FEEDERS MUST LEAVE AREAS AND WIRE OF EQUAL AMPACITY. INSTALL JUNCTION BOX ADJACENT TO TRAY FOR TRANSITION.

206 | TYPICAL POWER CABLE TRAY DETAIL
STD — N.T.S.

Last saved by: MOONJUNG.PERSSON(2018-12-12) Last Plotted: 2018-12-12
Filename: P:\60247924\000-CAD\02-SHEETS\E\60247924-SHT-30-LS-E-401.DWG
Printed on ___% Post-Consumer Recycled Content Paper

This drawing has been prepared for the use of AECOM's client and may not be used, reproduced or relied upon by third parties, except as agreed by AECOM and its client, as required by law or for use by governmental reviewing agencies. AECOM accepts no responsibility, and denies any liability whatsoever, to any party that modifies this drawing without AECOM's express written consent. Do not scale this document. All measurements must be obtained from stated dimensions.

AECOM

PROJECT

City of Brandon
Kirkcaldy Lift Station

CLIENT

City of Brandon
Brandon, Manitoba

CONSULTANT

AECOM
99 Commerce Drive
Winnipeg, Manitoba R3P 0Y7
204.477.5381 tel 204.284.2040 fax
www.aecom.com

REGISTRATION

PROVINCE OF MANITOBA — SADLER — Member — 30812 — REGISTERED PROFESSIONAL ENGINEER

APEGM
Certificate of Authorization
AECOM Canada Ltd.
No. 4671 Date: 2018.12.14

ISSUE/REVISION

I/R	DATE	DESCRIPTION
1	2018.12.14	ISSUED FOR CONSTRUCTION
0	2018.08.10	ISSUED FOR TENDER

PROJECT NUMBER

60247924

SHEET TITLE

KIRKCALDY LIFT STATION
ELECTRICAL
STANDARD DETAILS

SHEET NUMBER

E-401

Project Management Initials: Designer: Checked: Approved: ANSI D 864mm x 559mm

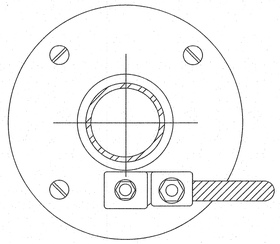

PLAN VIEW

CONNECTION TO RAILING POST BASE

(DETAILS FOR GROUNDING HANDRAIL SUPPORTS ARE SIMILAR)

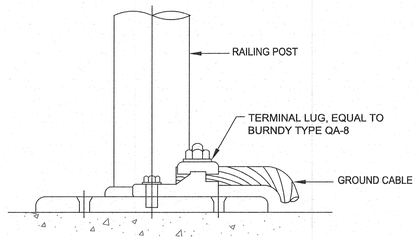

301 | RAILING POST BASE & HANDRAIL SUPPORT GROUNDING DETAIL
STD — N.T.S.

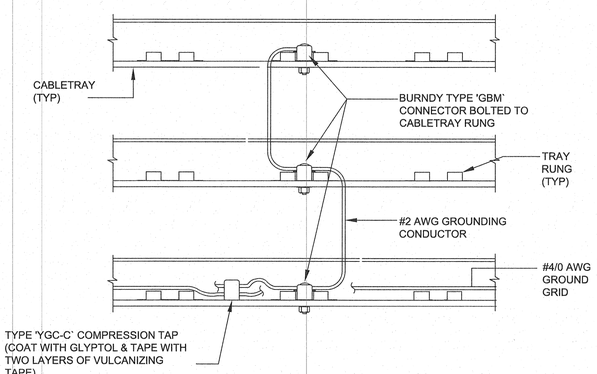

302 | CABLE TRAY GROUNDING DETAIL
STD — N.T.S.

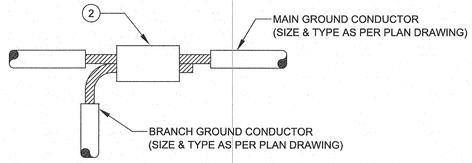

NOTES:
1. PROVIDE MECHANICAL PROTECTION AS REQUIRED.

ITEM	QTY.	DESCRIPTION
1	1	SERVIT POST GROUND CONNECTOR, SINGLE CONDUCTOR (COPPER ALLOY)
2	1	COMPRESSION CONNECTOR, DIRECT BURIAL, C-TAP (COPPER)

303 | TYPICAL GROUND SPLICE DETAIL
STD — N.T.S.

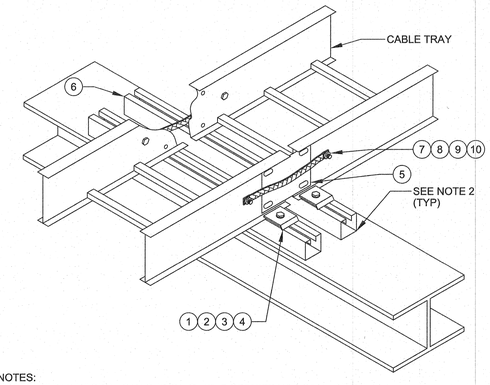

NOTES:
1. CABLE TRAY DESIGN IS BASED ON SIMPLE SPAN TRAY INSTALLATION.
2. BOLT HEADS SHALL BE LOCATED INSIDE TRAY

ITEM	QUANTITY	DESCRIPTION
1	4	HOLD DOWN CLAMP/EXPANSION GUIDE (ALUM.)
2	4	CAP SCREW HEX HEAD BOLT (STAINLESS STEEL)
3	4	FLAT WASHER (STAINLESS STEEL)
4	4	SPRING NUT (ZINC PLATED)
5	1 PR	EXPANSION SPLICE PLATE (COMPLETE WITH HARDWARE)
6	AS REQ'D	STRUT CHANNEL (HDG)
7	2	FLEXIBLE BRAID (COPPER)
8	4	CAP SCREW HEX HEAD BOLT (STAINLESS STEEL)
9	4	LOCK WASHER (STAINLESS STEEL)
10	4	HEX NUT (STAINLESS STEEL)

304 | TYPICAL CABLE TRAY SPLICE BONDING DETAIL
STD — N.T.S.

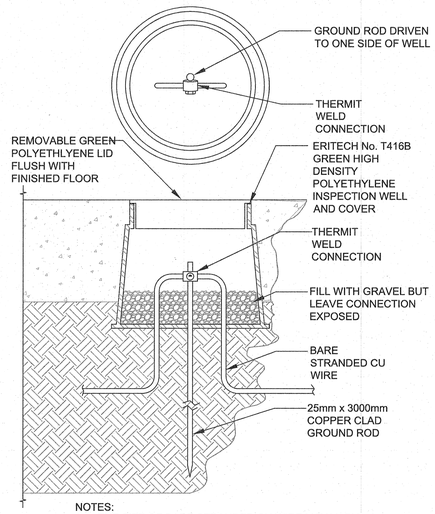

NOTES:
1. THE SIZE OF BARE STRANDED CU WIRE MAY VARY. REFER TO ELECTRICAL DRAWINGS FOR SIZE.

305 | GROUND ROD INSTALLATION DETAIL
STD — N.T.S.

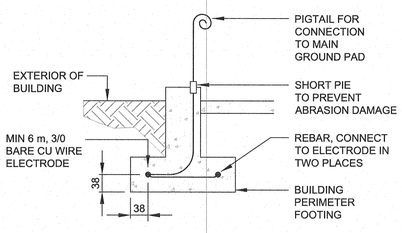

NOTES:
1. USE THERMAL WELDING PROCESS (SUCH AS "CADWELD") OR APPROVED COMPRESSION TYPE CONNECTORS TO MAKE GROUND WIRE CONNECTIONS.
2. THE SIZE OF BARE STRANDED CU WIRE MAY VARY. REFER TO ELECTRICAL DRAWINGS FOR SIZE.

307 | CONCRETE ENCASED WIRE TYPE GROUND ELECTRODE DETAIL
STD — N.T.S.

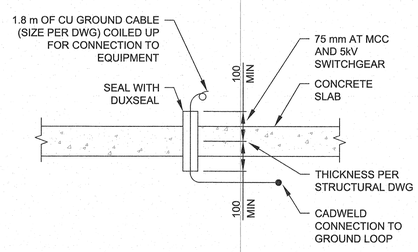

308 | EQUIPMENT GROUND CABLE STUB-UP DETAIL
STD — N.T.S.

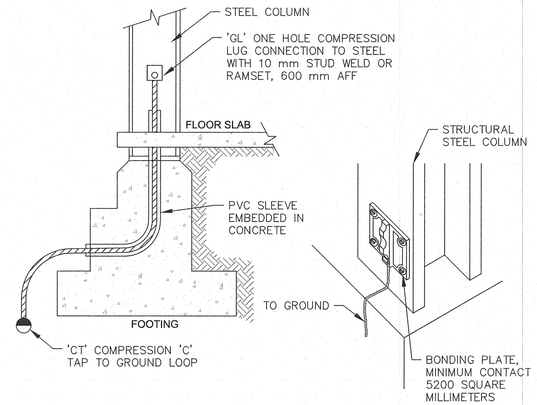

309 | STEEL COLUMN OF METAL BUILDING DETAIL
STD — N.T.S.

This drawing has been prepared for the use of AECOM's client and may not be used, reproduced or relied upon by third parties, except as agreed by AECOM and its client, as required by law or for use by governmental reviewing agencies. AECOM accepts no responsibility, and denies any liability whatsoever, to any party that modifies this drawing without AECOM's express written consent. Do not scale this document. All measurements must be obtained from stated dimensions.

AECOM

PROJECT

City of Brandon
Kirkcaldy Lift Station

CLIENT

City of Brandon
Brandon, Manitoba

City of BRANDON

CONSULTANT

AECOM
99 Commerce Drive
Winnipeg, Manitoba R3P 0Y7
204.477.5381 tel 204.284.2040 fax
www.aecom.com

REGISTRATION

PROVINCE OF MANITOBA — J. A. SADLER — 30812 — REGISTERED PROFESSIONAL ENGINEER

APEGM
Certificate of Authorization
AECOM Canada Ltd.
No. 4671 Date: 2018.12.14

ISSUE/REVISION

I/R	DATE	DESCRIPTION
1	2018.12.14	ISSUED FOR CONSTRUCTION
0	2018.08.10	ISSUED FOR TENDER

PROJECT NUMBER

60247924

SHEET TITLE

KIRKCALDY LIFT STATION
ELECTRICAL
STANDARD DETAILS

SHEET NUMBER

E-402

Last saved by: CHAVEZR(2018-08-03) Last Plotted: 2018-12-12
Filename: P:\60247924\000-CAD\02-SHEETS\E\60247924-SHT-30-LS-E-402.DWG
Printed on ___% Post-Consumer Recycled Content Paper

Project Management Initials: Designer: ____ Checked: ____ Approved: ____ ANSI D 864mm x 559mm

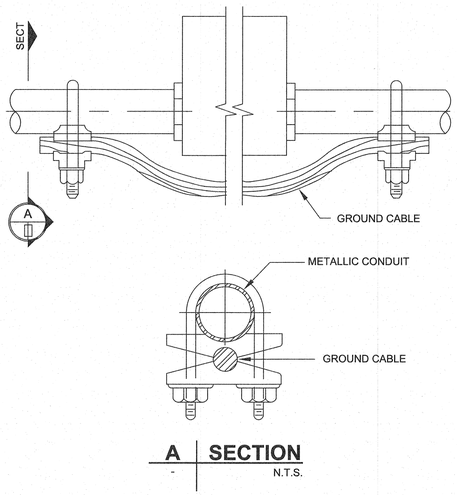

A | SECTION
N.T.S.

NOTES:
1. CLAMPS SHALL BE EQUAL TO BURDY TYPE GAR OR GD AND BARE COPPER CABLE IN ACCORDANCE WITH A BONDING JUMPER EQUAL TO O-Z/GEDNEY BONDING TYPE BJ (WITH BRONZE FITTINGS).

310 | BONDING CONDUITS AROUND JUNCTION BOXES DETAIL
STD — N.T.S.

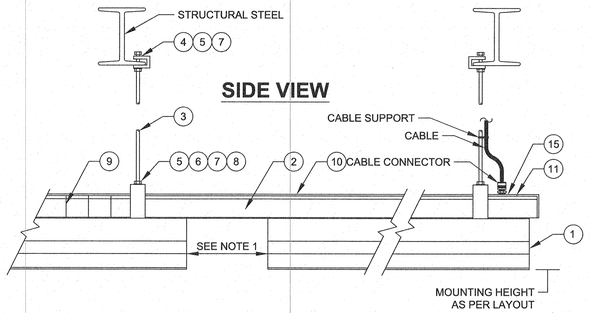

NOTES:
1. UTILIZE STRUT CHANNEL AS A RACEWAY.
2. SPACING BETWEEN CHANNEL HANGER SUPPORTS SHALL NOT EXCEED 3.0 m.
3. FASTEN FIXTURES TO STRUT CHANNEL WITH STUD NUTS.

ITEM	QTY.	DESCRIPTION
1	1	LIGHTING FIXTURE, LED TYPE C/W ACRYLIC COVER
2	AS REQ'D	STRUT CHANNEL (HDG)
3	AS REQ'D	ALL THREAD (ZINC PLATED)
4	2	ROD BEAM CLAMP ROD SIZE (ZINC PLATED)
5	6	HEX NUT (STAINLESS STEEL)
6	4	FLAT WASHER (STAINLESS STEEL)
7	4	LOCK WASHER (STAINLESS STEEL)
8	2	CHANNEL HANGER (STANDARD FINISH)
9	1	STRUT CHANNEL INSIDE JOINER (ZINC PLATED)
10	AS REQ'D	CLOSURE STRIP (GREY PLASTIC)
11	AS REQ'D	END CAP C/W KNOCK-OUT (ZINC PLATED)
12	AS REQ'D	WIRING STUD NUT PIPE THREAD
13	AS REQ'D	LOCK NUT (ALUM.)
14	AS REQ'D	STUD NUT (STANDARD FINISH)
15	AS REQ'D	STRUT CHANNEL CABLE CONNECTOR PLATE C/W HARDWARE

401 | TYPICAL UNISTRUT MOUNT FIXTURES DETAIL
STD — N.T.S.

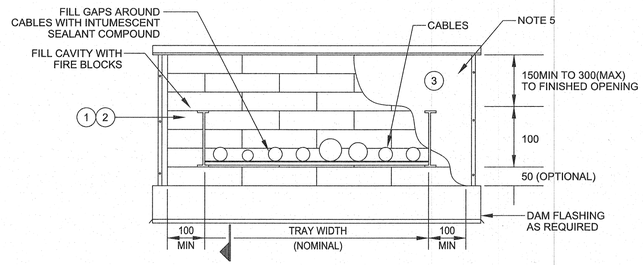

FRONT VIEW

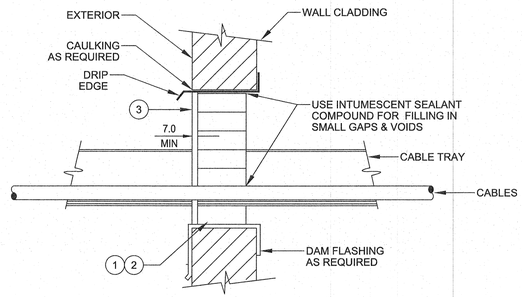

SIDE VIEW

NOTES:
1. FIRE STOP SYSTEM QUANTITIES DETERMINED FROM WALL SIZE OPENINGS.
2. FIRE STOP SYSTEMS TO BE INSTALLED AFTER MECHANICAL COMPLETION OF ENTIRE ELECTRICAL SYSTEM.
3. THIS DETAIL ILLUSTRATES A TYPICAL METHOD FOR WALL PENETRATION AND FIRESTOP INSTALLATION. ALL FIRE RATED PENETRATIONS SHALL COMPLY WITH A TESTED cUL SYSTEM ARRANGEMENT. OPENING SIZE/TYPE AND SIZE OF PENETRATING ITEMS SHALL BE WITHIN THE RANGE SPECIFIED WITHIN THE cUL SYSTEM DETAIL.
4. FIRE BLOCKS SHALL BE PROTECTED FROM ULTRAVIOLET RADIATION AND WATER BY AT LEAST A 7mm THICK COATING OF FIRESTOP ELASTOMERIC SEALANT.
5. ALL SEALANTS SHALL BE APPLIED AS PER THE MANUFACTURES RECOMMENDATIONS.

ITEM	QUANTITY	DESCRIPTION
1	AS REQ'D	FIRESTOP SYSTEM FIRE BLOCKS
2	AS REQ'D	FIRESTOP SYSTEM INTUMESCENT SEALANT
3	AS REQ'D	FIRESTOP SYSTEM ELASTOMERIC SEALANT

402 | TYPICAL WALL PENETRATION SEALING DETAIL
STD — N.T.S.

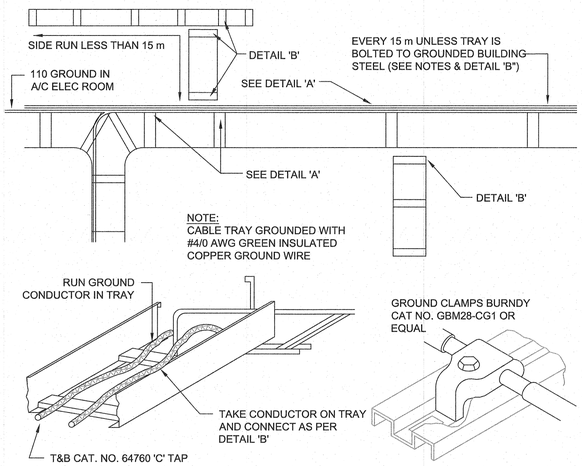

DETAIL 'A' **DETAIL 'B'**

NOTES:
1. WHERE METAL SUPPORTS FOR CABLE TRAYS ARE BOLTED TO THE TRAY AND ARE IN GOOD ELECTRICAL CONTACT WITH THE ROUNDED STRUCTURAL METAL FRAME OF A BUILDING THE TROUGH SHALL BE DEEMED TO BE GROUNDED.
2. WHERE THE CONDITIONS OF SUBRULE (1) DO NOT APPLY THE CABLE TRAY SHALL BE ADEQUATELY GROUNDED AT INTERVALS NOT EXCEEDING 15 m AS SHOWN.

311 | CABLE TRAY GROUNDING DETAIL
STD — N.T.S.

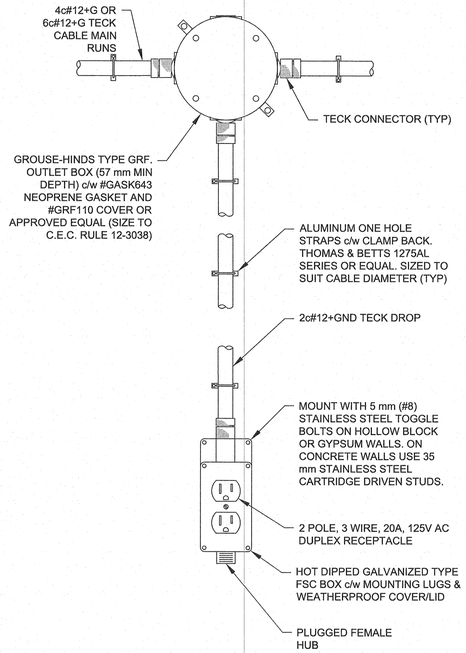

403 | DUPLEX RECEPTACLLE WALL MOUNT DETAIL
STD — N.T.S.

This drawing has been prepared for the use of AECOM's client and may not be used, reproduced or relied upon by third parties, except as agreed by AECOM and its client, as required by law or for use by governmental reviewing agencies. AECOM accepts no responsibility, and denies any liability whatsoever, to any party that modifies this drawing without AECOM's express written consent. Do not scale this document. All measurements must be obtained from stated dimensions.

AECOM

PROJECT
City of Brandon
Kirkcaldy Lift Station

CLIENT
City of Brandon
Brandon, Manitoba

CONSULTANT
AECOM
99 Commerce Drive
Winnipeg, Manitoba R3P 0Y7
204.477.5381 tel 204.284.2040 fax
www.aecom.com

REGISTRATION

PROVINCE OF MANITOBA
S. P. G. SADLER
Member 30812
Dec 13 2018
REGISTERED PROFESSIONAL ENGINEER

APEGM
Certificate of Authorization
AECOM Canada Ltd.
No. 4671 Date: 2018.12.14

ISSUE/REVISION

I/R	DATE	DESCRIPTION
1	2018.12.14	ISSUED FOR CONSTRUCTION
0	2018.08.10	ISSUED FOR TENDER

PROJECT NUMBER
60247924

SHEET TITLE
KIRKCALDY LIFT STATION
ELECTRICAL
STANDARD DETAILS

SHEET NUMBER
E-403 1

Last saved by: MOONJUNG.PERSSON(2018-12-12) Last Plotted: 2018-12-12
Filename: P:\60247924\000-CAD\02-SHEETS\E\60247924-SHT-30-LS-E-403.DWG

Printed on ___% Post-Consumer Recycled Content Paper

AECOM Imagine it. Delivered.

Appendix B

Kirkcaldy Forcemain
Issued for 90% Review Drawings

DRAWING INDEX

GENERAL

G-000	GENERAL	COVER SHEET & DRAWING INDEX

CIVIL

C-000	SOUTH FORCEMAIN	OVERALL LAYOUT
C-001	SOUTH FORCEMAIN	PLAN/PROFILE - LIFT STATION TO STA. 0+200
C-002	SOUTH FORCEMAIN	PLAN/PROFILE - STA. 0+200 TO STA. 0+450
C-003	SOUTH FORCEMAIN	PLAN/PROFILE - STA. 0+450 TO STA. 0+770
C-004	SOUTH FORCEMAIN	PLAN/PROFILE - STA. 0+770 TO STA. 1+040
C-005	SOUTH FORCEMAIN	PLAN/PROFILE - STA. 1+040 TO STA. 1+375
C-006	SOUTH FORCEMAIN	PLAN/PROFILE - STA. 1+375 TO STA. 1+700
C-007	SOUTH FORCEMAIN	PLAN/PROFILE - CPR CROSSING - STA. 1+700 TO STA. 1+825
C-008	DISCOVERY CENTRE WWS SERVICE	PLAN/PROFILE - MH 12-112 TO MH 12-188
C-401	SOUTH FORCEMAIN	DETAILS - SHEET 1
L-001	SOUTH FORCEMAIN	LANDSCAPE ARCHITECTURE - REMOVALS AND LANDSCAPE PLAN

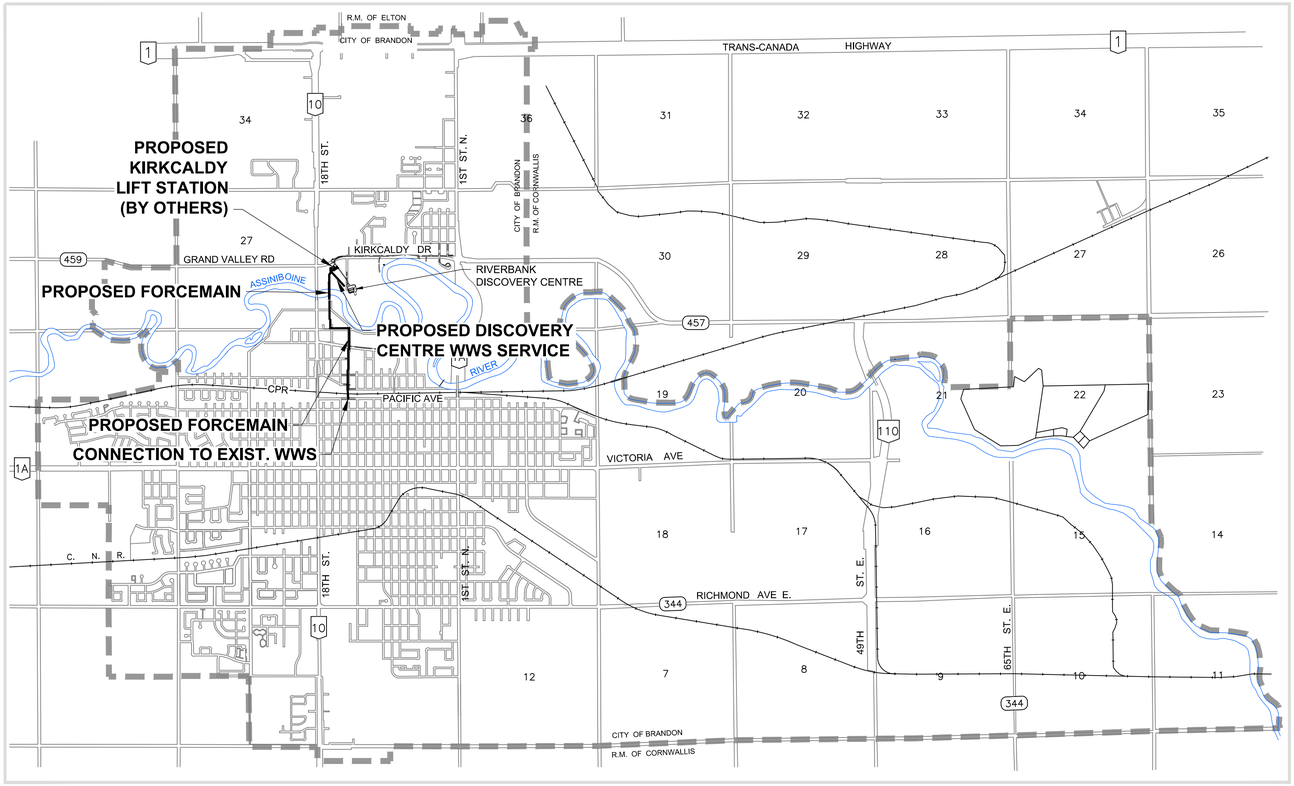

LOCATION PLAN
Scale Horz. 1:35000

AECOM

PROJECT
City of Brandon
South Forcemain

CLIENT
City of Brandon
Brandon, Manitoba

CONSULTANT
AECOM
99 Commerce Drive
Winnipeg, Manitoba R3P 0Y7
204.477.5381 tel 204.284.2040 fax
www.aecom.com

PRELIMINARY
NOT FOR CONSTRUCTION
Date: 2018.09.04

REGISTRATION

ISSUE/REVISION

I/R	DATE	DESCRIPTION
0	2018.09.04	ISSUED FOR 90% REVIEW

PROJECT NUMBER
60247924

SHEET TITLE
GENERAL
GENERAL
COVER SHEET & DRAWING INDEX

SHEET NUMBER
G-000

This drawing has been prepared for the use of AECOM's client and may not be used, reproduced or relied upon by third parties, except as agreed by AECOM and its client as required by law or for use by governmental reviewing agencies. AECOM accepts no responsibility, and denies any liability whatsoever, to any party that modifies this drawing without AECOM's express written consent. Do not scale this document. All measurements must be obtained from stated dimensions.

Project Management Initials: Designer: ____ Checked: ____ Approved: ____ ANSI D 864mm x 559mm
Last saved by: PEDERSENJ(2018-08-28) Last Plotted: 2018-09-04
Filename: P:\60247924\000-CAD\02-SHEETS\GI\KIRKCALDY LIFT STATION AND SOUTH FORCEMAIN\60247924-SHT-30-PH02-G-0000.DWG
Printed on ___% Post-Consumer Recycled Content Paper

Project Management Initials: ____ Designer: ____ Checked: ____ Approved: ____ ANSI D 864mm x 559mm

Last saved by: PEDERSENJ (2018-08-28) Last Plotted: 2018-09-04
Filename: P:\60247924\000-CAD\02-SHEETS\CS\SOUTH FORCEMAIN\60247924-SHT-30-PH02-C-0000.DWG

Printed on ___% Post-Consumer Recycled Content Paper



PLAN
Scale 1:4000

150 WM	WATERMAIN	150 WM	HYDRO		150 WM	WATERMAIN	150 WM
	HYDRANT		MTS		300 LDS	LAND DRAINAGE SEWER	300 LDS
	VALVE		GAS		250 WWS	WASTE WATER SEWER	250 WWS
300 LDS	LAND DRAINAGE SEWER	300 LDS	LAMP STANDARD			PAVEMENT CROWN	
250 WWS	WASTE WATER SEWER	250 WWS				GROUNDLINE	
	MANHOLE		TRAFFIC SIGNAL				
	CATCH BASIN		ASPHALT				
	FLOW DIRECTION		CONCRETE				
	CULVERT		BACK OF CURB				
	TREE		DRAINAGE				
	SURVEY BAR						
EXISTING	LEGEND - PLAN	NEW	EXISTING	LEGEND - PLAN	NEW	EXISTING	LEGEND - PROFILE	NEW

This drawing has been prepared for the use of AECOM's client and may not be used, reproduced or relied upon by third parties, except as agreed by AECOM and its client, as required by law or for use by governmental reviewing agencies. AECOM accepts no responsibility, and denies any liability whatsoever, to any party that modifies this drawing without AECOM's express written consent. Do not scale this document. All measurements must be obtained from stated dimensions.

AECOM

PROJECT
City of Brandon
South Forcemain

CLIENT
City of Brandon
Brandon, Manitoba

CONSULTANT
AECOM
99 Commerce Drive
Winnipeg, Manitoba R3P 0Y7
204.477.5381 tel 204.284.2040 fax
www.aecom.com

PRELIMINARY
NOT FOR CONSTRUCTION
Date: 2018.09.04

REGISTRATION

ISSUE/REVISION

I/R	DATE	DESCRIPTION
0	2018.09.04	ISSUED FOR 90% REVIEW

PROJECT NUMBER
60247924

SHEET TITLE
SOUTH FORCEMAIN
CIVIL
OVERALL LAYOUT

SHEET NUMBER
C-000

Project Management Initials: Designer: Checked: Approved: ANSI D 864mm x 559mm
Last saved by: PEDERSEN,I (2018-10-09) Last Plotted: 2018-10-30
Filename: P:\60247924\000-CAD\02-SHEETS\CSOUTH FORCEMAIN\60247924-SHT-30-PH02-C-0001.DWG
Printed on ___% Post-Consumer Recycled Content Paper

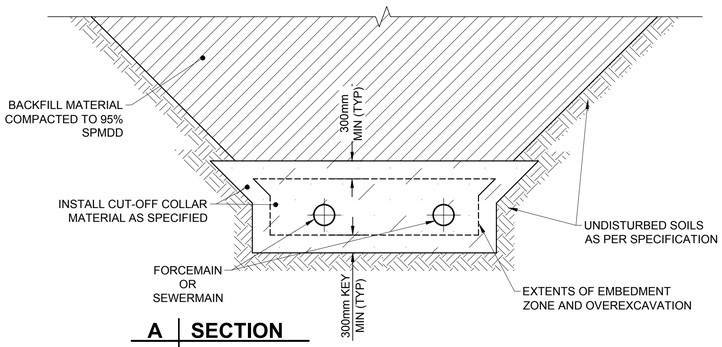

SEEPAGE CUT-OFF COLLAR DETAIL

N.T.S.

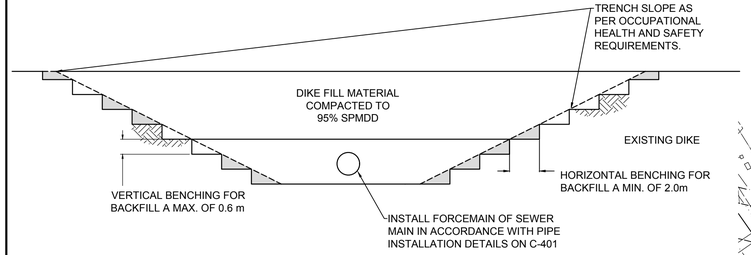

DIKE BENCHING DETAIL

N.T.S.

CONSTRUCTION NOTES:

1. ALL WORK AND MATERIAL IN ACCORDANCE WITH THE LATEST REVISION OF THE CITY OF BRANDON STANDARD SPECIFICATION UNLESS NOTED OTHERWISE.
2. LOCATION OF UNDERGROUND STRUCTURES AS SHOWN ARE BASED ON THE BEST INFORMATION AVAILABLE, BUT NO GUARANTEE IS GIVEN THAT ALL EXISTING UTILITIES ARE SHOWN OR THAT THE GIVEN LOCATIONS ARE EXACT. CONFIRMATION OF EXISTENCE AND EXACT LOCATION OF ALL SERVICES MUST BE OBTAINED FROM THE INDIVIDUAL UTILITIES BEFORE PROCEEDING WITH CONSTRUCTION.
3. EXPOSE ALL UNDERGROUND UTILITIES BY HYDROVAC EXCAVATION.
4. CONTRACTOR TO RESTORE AREA TO EQUAL OR BETTER THAN ORIGINAL CONDITION MAINTAINING POSITIVE DRAINAGE TOWARDS DITCHES.
5. ALL PIPE ABANDONMENTS TO OCCUR AFTER LIFT STATION AND FORCEMAINS ARE OPERATIONAL.
6. RECONSTRUCTION OF ANY PORTIONS OF THE DIKE SHALL BE REVIEWED WITH ENGINEER AND COMPLETED IN ACCORDANCE WITH SECTION 02317 - DIKE EMBANKMENTS, AND AS SHOWN IN DIKE BENCHING DETAIL.

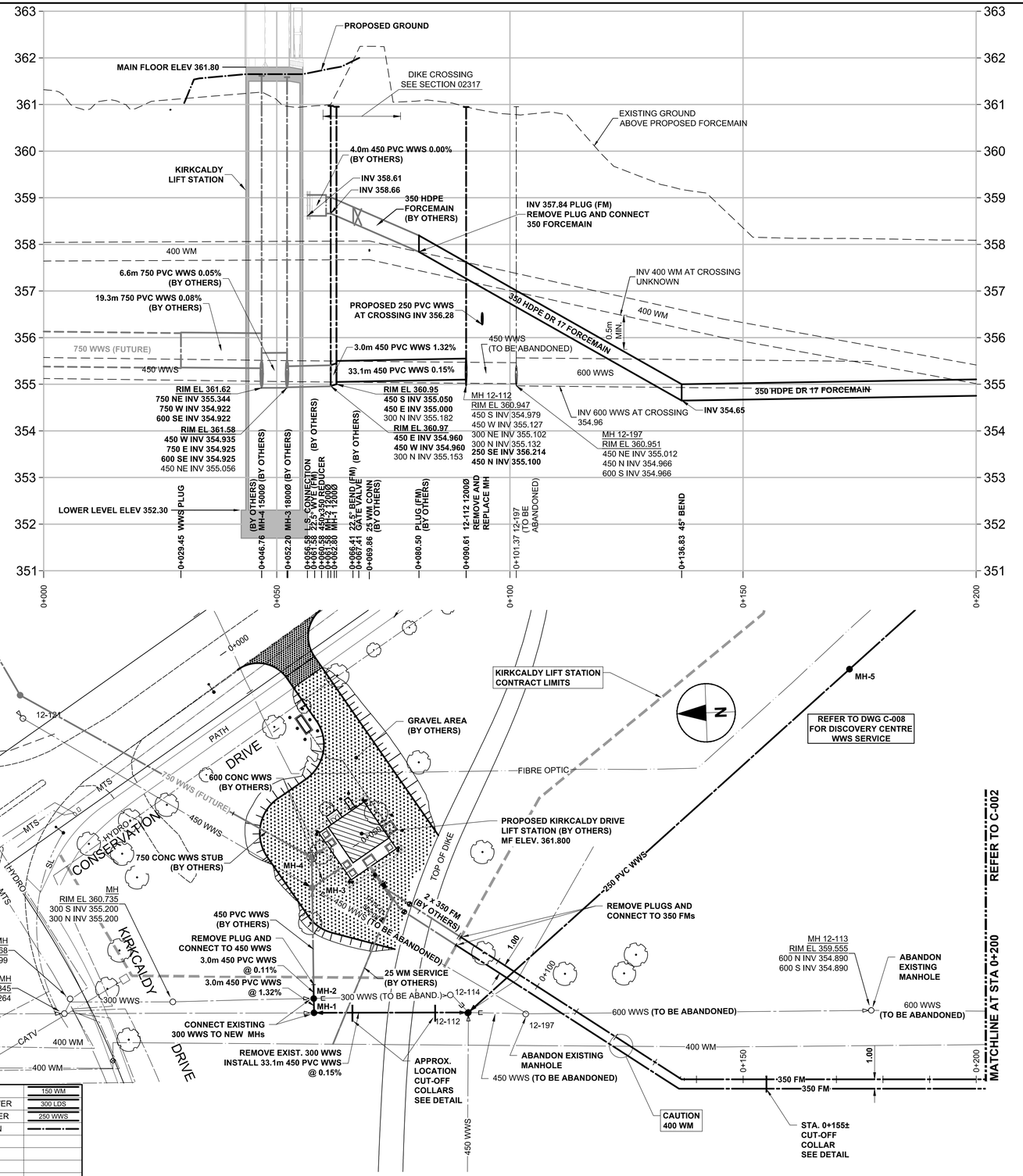

PLAN

Scale Horz. 1:500
Vert. 1:50

150 WM	WATERMAIN	150 WM		HYDRO		150 WM	WATERMAIN	150 WM
	HYDRANT			MTS		300 LDS	LAND DRAINAGE SEWER	300 LDS
	VALVE			GAS		250 WWS	WASTE WATER SEWER	250 WWS
300 LDS	LAND DRAINAGE SEWER	300 LDS		LAMP STANDARD			PAVEMENT CROWN	
250 WWS	WASTE WATER SEWER	250 WWS					GROUNDLINE	
	MANHOLE			TRAFFIC SIGNAL				
	CATCH BASIN			ASPHALT				
	FLOW DIRECTION			CONCRETE				
	CULVERT			BACK OF CURB				
	TREE			DRAINAGE				
	SURVEY BAR		360.634	GRADE	361.300			
EXISTING	LEGEND - PLAN	NEW	EXISTING	LEGEND - PLAN	NEW	EXISTING	LEGEND - PROFILE	NEW

This drawing has been prepared for the use of AECOM's client and may not be used, reproduced or relied upon by third parties, except as agreed by AECOM and its client, as required by law or for use by governmental reviewing agencies. AECOM accepts no responsibility, and denies any liability whatsoever, to any party that modifies this drawing without AECOM's express written consent. Do not scale this document. All measurements must be obtained from stated dimensions.

AECOM

PROJECT

City of Brandon
South Forcemain

CLIENT

City of Brandon
Brandon, Manitoba

CONSULTANT

AECOM
99 Commerce Drive
Winnipeg, Manitoba R3P 0Y7
204.477.5381 tel 204.284.2040 fax
www.aecom.com

PRELIMINARY
NOT FOR CONSTRUCTION
Date: 2018.09.04

REGISTRATION

ISSUE/REVISION

0	2018.09.04	ISSUED FOR 90% REVIEW
I/R	DATE	DESCRIPTION

PROJECT NUMBER

60247924

SHEET TITLE

SOUTH FORCEMAIN
CIVIL
PLAN/PROFILE
LIFT STATION TO STA. 0+200

SHEET NUMBER

C-001

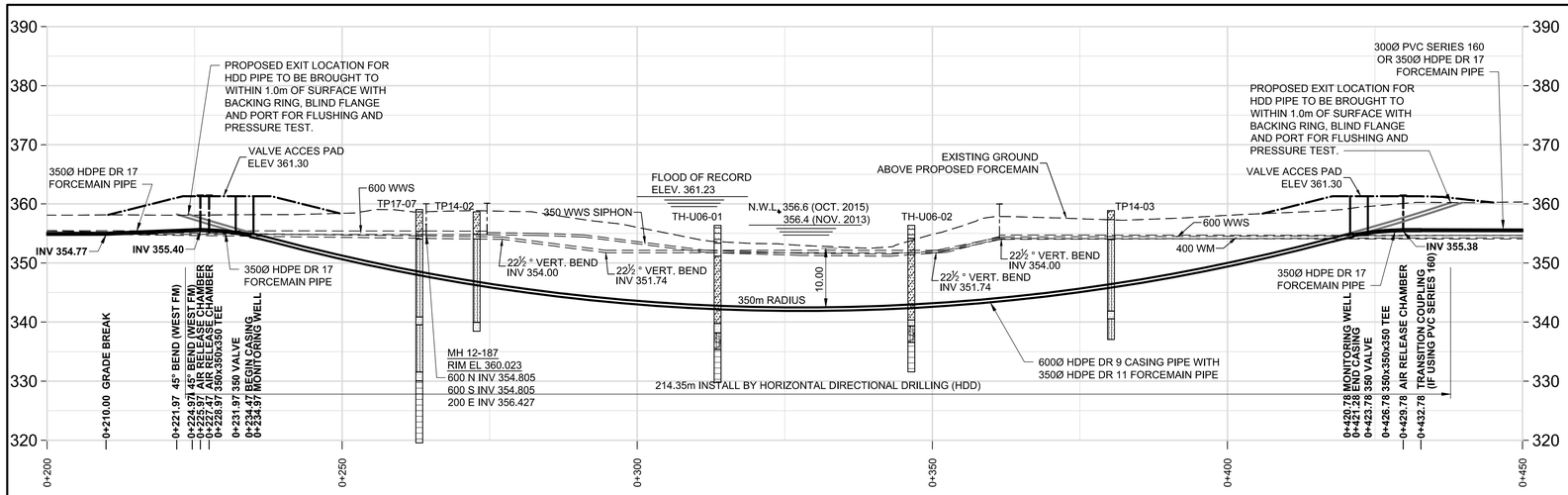

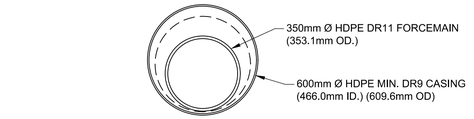

1 - CASING PIPE N.T.S.

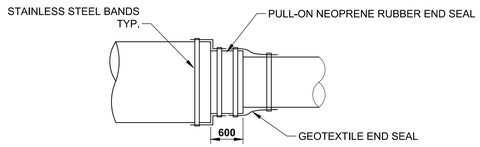

END SEAL PLAN N.T.S.

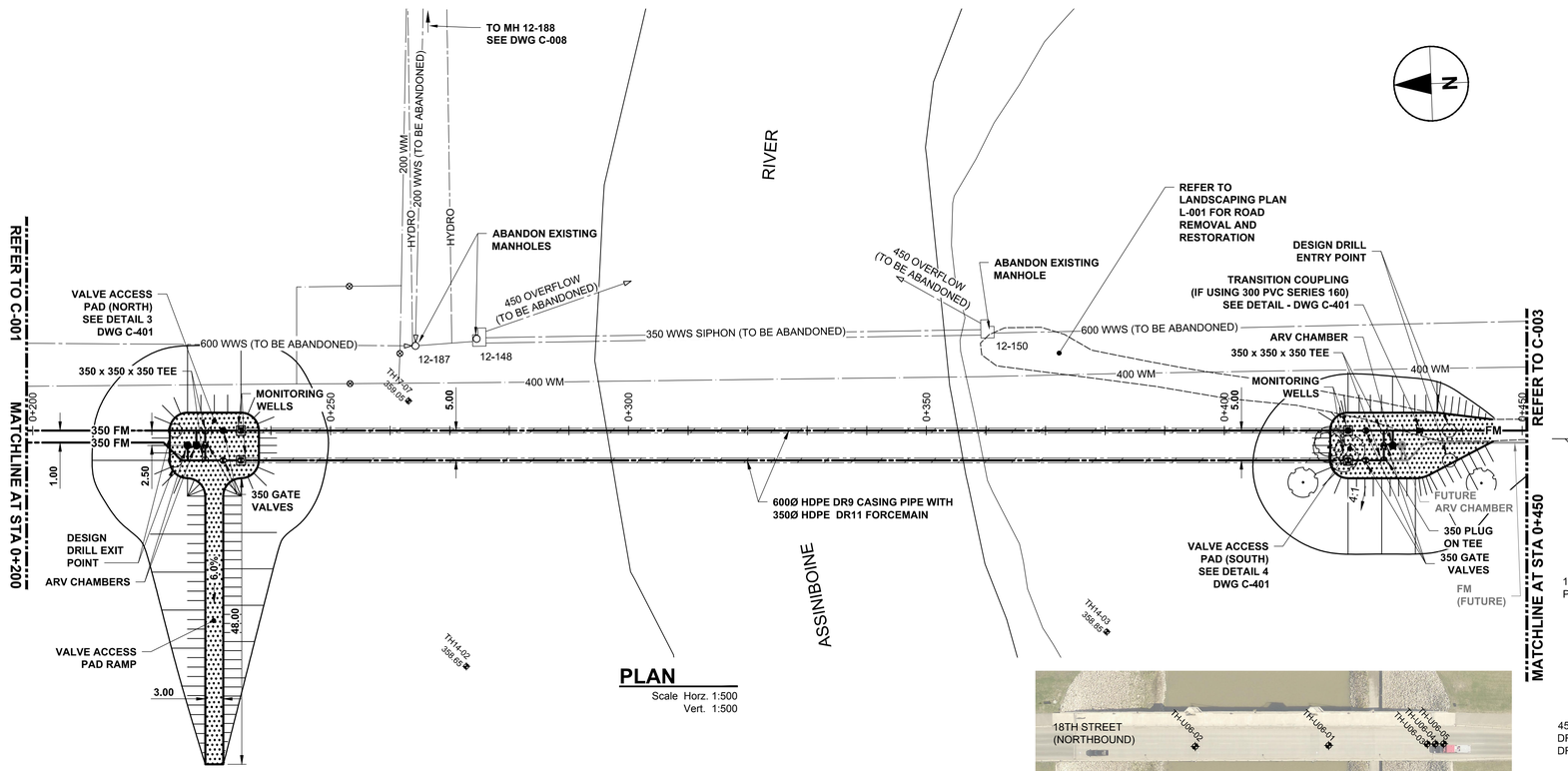

PLAN
Scale Horz. 1:500
Vert. 1:500

2006 TESTHOLE LOCATION PLAN
Scale NTS

150 WM	WATERMAIN	150 WM		HYDRO		150 WM	WATERMAIN	150 WM
	HYDRANT			MTS		300 LDS	LAND DRAINAGE SEWER	300 LDS
	VALVE			GAS		250 WWS	WASTE WATER SEWER	250 WWS
300 LDS	LAND DRAINAGE SEWER	300 LDS		LAMP STANDARD			PAVEMENT CROWN	
250 WWS	WASTE WATER SEWER	250 WWS					GROUNDLINE	
	MANHOLE			TRAFFIC SIGNAL				
	CATCH BASIN			ASPHALT				
	FLOW DIRECTION			CONCRETE				
	CULVERT			BACK OF CURB				
	TREE			DRAINAGE				
	SURVEY BAR		360.634	GRADE	361.306			
EXISTING	LEGEND - PLAN	NEW	EXISTING	LEGEND - PLAN	NEW	EXISTING	LEGEND - PROFILE	NEW

CONSTRUCTION NOTES:

1. ALL WORK AND MATERIAL IN ACCORDANCE WITH THE LATEST REVISION OF THE CITY OF BRANDON STANDARD SPECIFICATION UNLESS NOTED OTHERWISE.
2. LOCATION OF UNDERGROUND STRUCTURES AS SHOWN ARE BASED ON THE BEST INFORMATION AVAILABLE, BUT NO GUARANTEE IS GIVEN THAT ALL EXISTING UTILITIES ARE SHOWN OR THAT THE GIVEN LOCATIONS ARE EXACT. CONFIRMATION OF EXISTENCE AND EXACT LOCATION OF ALL SERVICES MUST BE OBTAINED FROM THE INDIVIDUAL UTILITIES BEFORE PROCEEDING WITH CONSTRUCTION.
3. EXPOSE ALL UNDERGROUND UTILITIES BY HYDROVAC EXCAVATION.
4. TRENCH BACKFILL UNDER EXISTING PAVEMENTS SHALL BE IN ACCORDANCE WITH THE CITY OF BRANDON STANDARD CONSTRUCTION SPECIFICATIONS.
5. CONTRACTOR TO RESTORE AREA TO EQUAL OR BETTER THAN ORIGINAL CONDITION MAINTAINING POSITIVE DRAINAGE TOWARDS DITCHES.
6. ALL PIPE ABANDONMENTS TO OCCUR AFTER LIFT STATION AND FORCEMAINS ARE OPERATIONAL.

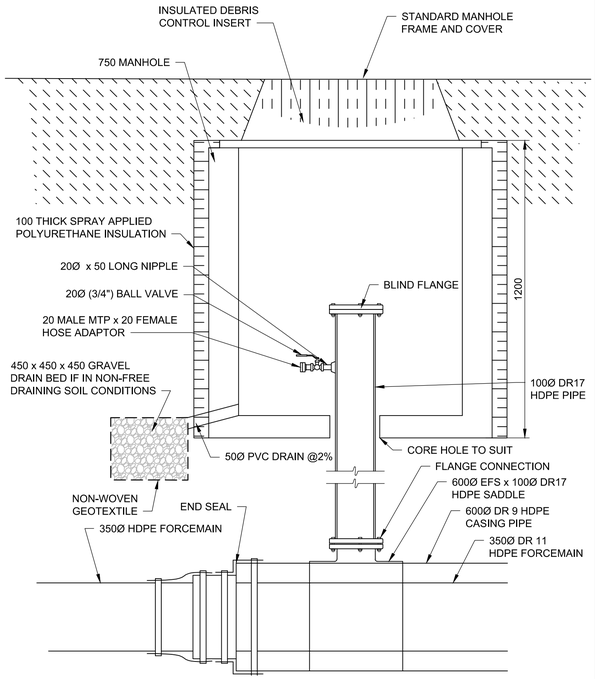

MONITORING WELL N.T.S.

AECOM

PROJECT
City of Brandon
South Forcemain

CLIENT
City of Brandon
Brandon, Manitoba

CONSULTANT
AECOM
99 Commerce Drive
Winnipeg, Manitoba R3P 0Y7
204.477.5381 tel 204.284.2040 fax
www.aecom.com

PRELIMINARY
NOT FOR CONSTRUCTION
Date: 2018.09.04

REGISTRATION

ISSUE/REVISION

0	2018.09.04	ISSUED FOR 90% REVIEW
I/R	DATE	DESCRIPTION

PROJECT NUMBER
60247924

SHEET TITLE
SOUTH FORCEMAIN
CIVIL
PLAN/PROFILE
STA. 0+200 TO STA. 0+450

SHEET NUMBER
C-002

This drawing has been prepared for the use of AECOM's client and may not be used, reproduced or relied upon by third parties, except as agreed by AECOM and as required by law or for governmental purposes. AECOM accepts no responsibility, and denies any liability whatsoever, to any party that modifies this drawing without AECOM's express written consent. Do not scale this document. All measurements must be obtained from stated dimensions.

Project Management Initials: Designer: Checked: Approved: ANSI D 864mm x 559mm

Last saved by: PEDERSENJ(2018-10-09) Last Plotted: 2018-10-30
Filename: P:\60247924\000-CAD\02-SHEETS\C\SOUTH FORCEMAIN\60247924-SHT-30-PH02-C-0001.DWG

Printed on ___% Post-Consumer Recycled Content Paper

Project Management Initials: ____ Designer: ____ Checked: ____ Approved: ____ ANSI D 864mm x 559mm

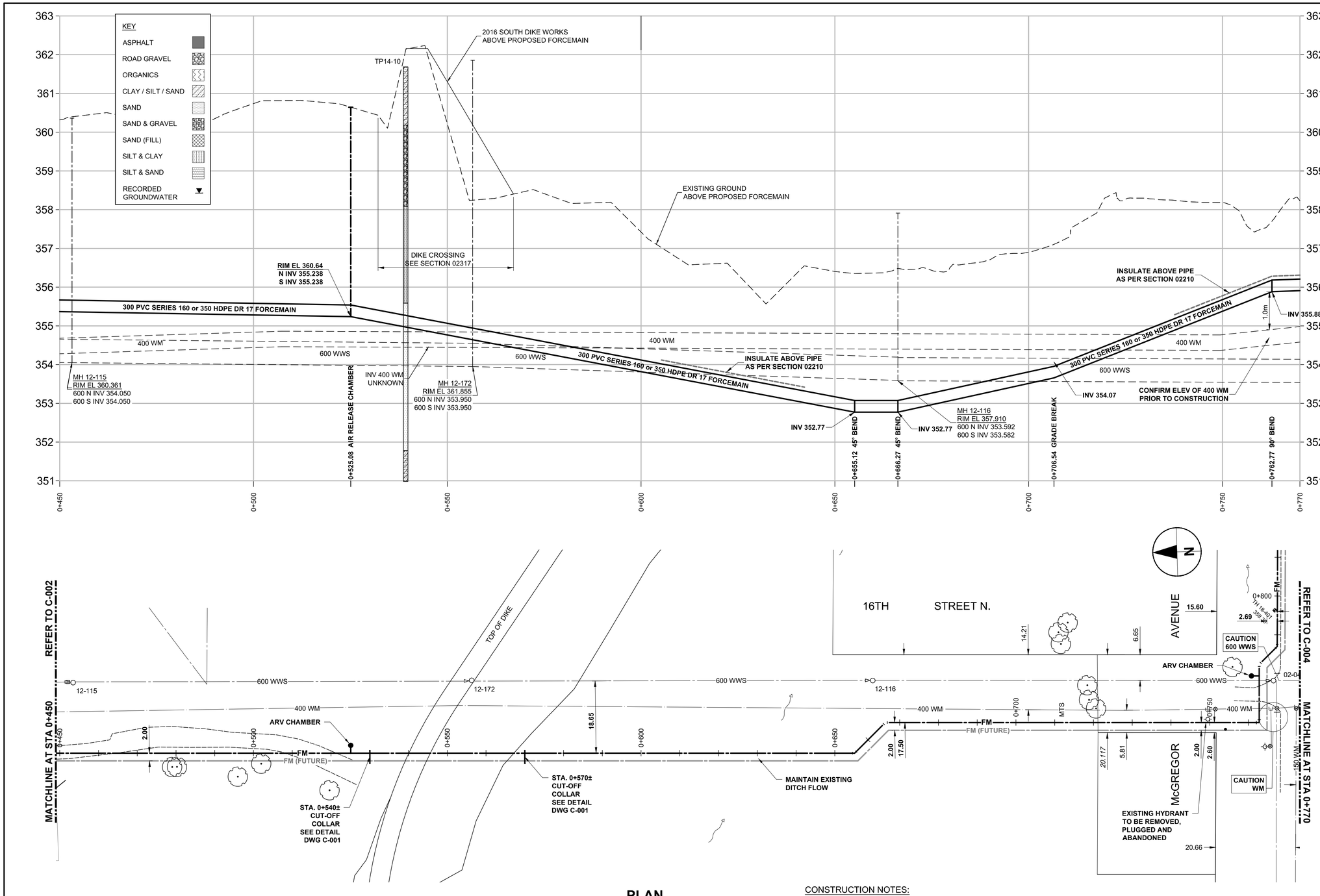

PLAN

Scale Horz. 1:500
Vert. 1:50

150 WM	WATERMAIN	150 WM		HYDRO		150 WM	WATERMAIN	150 WM
	HYDRANT			MTS		300 LDS	LAND DRAINAGE SEWER	300 LDS
	VALVE			GAS		250 WWS	WASTE WATER SEWER	250 WWS
300 LDS	LAND DRAINAGE SEWER	300 LDS		LAMP STANDARD			PAVEMENT CROWN	
250 WWS	WASTE WATER SEWER	250 WWS					GROUNDLINE	
	MANHOLE			TRAFFIC SIGNAL				
	CATCH BASIN			ASPHALT				
	FLOW DIRECTION			CONCRETE				
	CULVERT			BACK OF CURB				
	TREE			DRAINAGE				
	SURVEY BAR		360.634	GRADE	361.306			
EXISTING	LEGEND - PLAN	NEW	EXISTING	LEGEND - PLAN	NEW	EXISTING	LEGEND - PROFILE	NEW

CONSTRUCTION NOTES:

1. ALL WORK AND MATERIAL IN ACCORDANCE WITH THE LATEST REVISION OF THE CITY OF BRANDON STANDARD SPECIFICATION UNLESS NOTED OTHERWISE.
2. LOCATION OF UNDERGROUND STRUCTURES AS SHOWN ARE BASED ON THE BEST INFORMATION AVAILABLE. BUT NO GUARANTEE IS GIVEN THAT ALL EXISTING UTILITIES ARE SHOWN OR THAT THE GIVEN LOCATIONS ARE EXACT. CONFIRMATION OF EXISTENCE AND EXACT LOCATION OF ALL SERVICES MUST BE OBTAINED FROM THE INDIVIDUAL UTILITIES BEFORE PROCEEDING WITH CONSTRUCTION.
3. EXPOSE ALL UNDERGROUND UTILITIES BY HYDROVAC EXCAVATION.
4. CONTRACTOR TO RESTORE AREA TO EQUAL OR BETTER THAN ORIGINAL CONDITION MAINTAINING POSITIVE DRAINAGE TOWARDS DITCHES.
5. RECONSTRUCTION OF ANY PORTIONS OF THE DIKE SHALL BE REVIEWED WITH ENGINEER AND COMPLETED IN ACCORDANCE WITH SECTION 02317 - DIKE EMBANKMENTS, AND AS SHOWN IN THE DIKE BENCHING DETAIL.

This drawing has been prepared for the use of AECOM's client and may not be used, reproduced or relied upon by third parties except as agreed by AECOM and the client. AECOM accepts no responsibility, and denies any liability whatsoever, to any party that modifies this drawing without AECOM's express written consent. Do not scale this document. All measurements must be obtained from stated dimensions.

AECOM

PROJECT

City of Brandon
South Forcemain

CLIENT

City of Brandon
Brandon, Manitoba

CONSULTANT

AECOM
99 Commerce Drive
Winnipeg, Manitoba R3P 0Y7
204.477.5381 tel 204.284.2040 fax
www.aecom.com

PRELIMINARY
NOT FOR CONSTRUCTION
Date: 2018.09.04

REGISTRATION

ISSUE/REVISION

I/R	DATE	DESCRIPTION
0	2018.09.04	ISSUED FOR 90% REVIEW

PROJECT NUMBER

60247924

SHEET TITLE

SOUTH FORCEMAIN
CIVIL
PLAN/PROFILE
STA. 0+450 TO STA. 0+770

SHEET NUMBER

C-003

Last saved by: PEDERSENJ(2018-10-09) Last Plotted: 2018-10-30
Filename: P:\60247924\000-CAD\02-SHEETS\C\SOUTH FORCEMAIN\60247924-SHT-30-PH02-C-0001.DWG

Printed on ___% Post-Consumer Recycled Content Paper

Project Management Initials: Designer: ____ Checked: ____ Approved: ____ ANSI D 864mm x 559mm

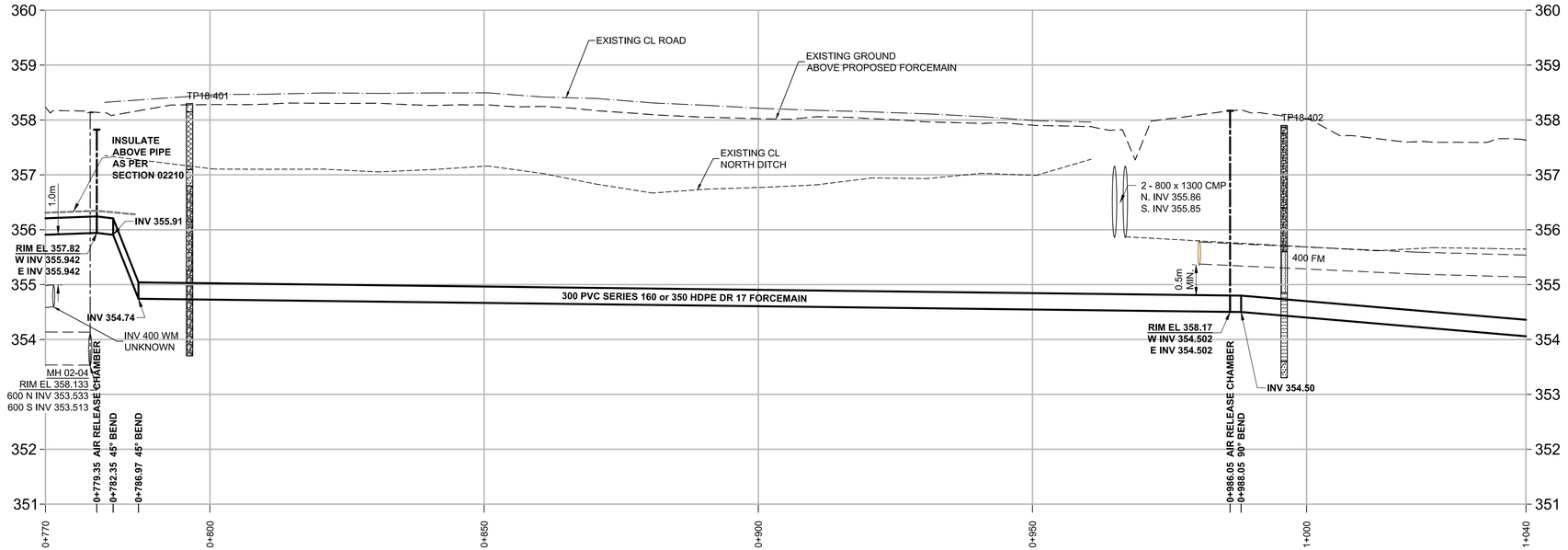

KEY

- ASPHALT
- ROAD GRAVEL
- ORGANICS
- CLAY / SILT / SAND
- SAND
- SAND & GRAVEL
- SAND (FILL)
- SILT & CLAY
- SILT & SAND
- RECORDED GROUNDWATER



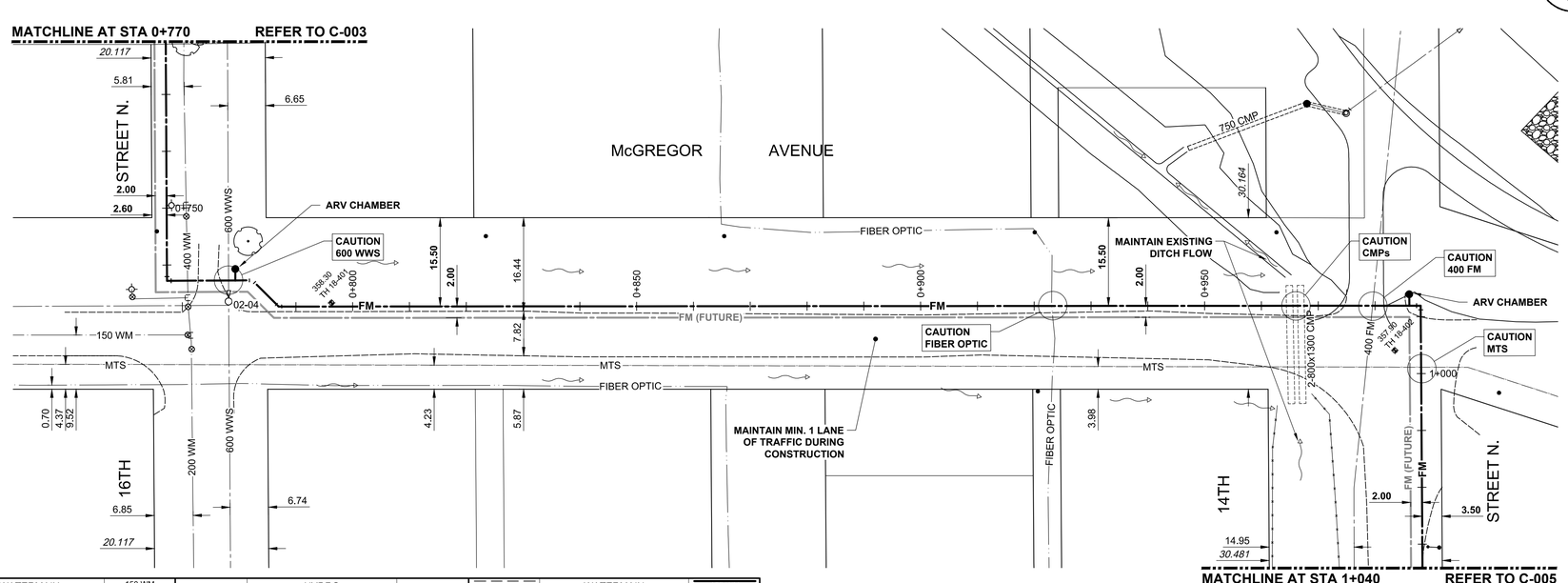

150 WM	WATERMAIN	150 WM		HYDRO		150 WM	WATERMAIN	150 WM
	HYDRANT			MTS		300 LDS	LAND DRAINAGE SEWER	300 LDS
	VALVE			GAS		250 WWS	WASTE WATER SEWER	250 WWS
300 LDS	LAND DRAINAGE SEWER	300 LDS		LAMP STANDARD			PAVEMENT CROWN	
250 WWS	WASTE WATER SEWER	250 WWS					GROUNDLINE	
	MANHOLE			TRAFFIC SIGNAL				
	CATCH BASIN			ASPHALT				
	FLOW DIRECTION			CONCRETE				
	CULVERT			BACK OF CURB				
	TREE			DRAINAGE				
	SURVEY BAR		360.634	GRADE	361.300			
EXISTING	LEGEND - PLAN	NEW	EXISTING	LEGEND - PLAN	NEW	EXISTING	LEGEND - PROFILE	NEW

PLAN
Scale Horz. 1:500

CONSTRUCTION NOTES:

1. ALL WORK AND MATERIAL IN ACCORDANCE WITH THE LATEST REVISION OF THE CITY OF BRANDON STANDARD SPECIFICATION UNLESS NOTED OTHERWISE.
2. LOCATION OF UNDERGROUND STRUCTURES AS SHOWN ARE BASED ON THE BEST INFORMATION AVAILABLE. BUT NO GUARANTEE IS GIVEN THAT ALL EXISTING UTILITIES ARE SHOWN OR THAT THE GIVEN LOCATIONS ARE EXACT. CONFIRMATION OF EXISTENCE AND EXACT LOCATION OF ALL SERVICES MUST BE OBTAINED FROM THE INDIVIDUAL UTILITIES BEFORE PROCEEDING WITH CONSTRUCTION.
3. EXPOSE ALL UNDERGROUND UTILITIES BY HYDROVAC EXCAVATION.
4. TRENCH BACKFILL UNDER EXISTING PAVEMENTS SHALL BE IN ACCORDANCE WITH THE CITY OF BRANDON STANDARD CONSTRUCTION SPECIFICATIONS.
5. CONTRACTOR TO RESTORE AREA TO EQUAL OR BETTER THAN ORIGINAL CONDITION MAINTAINING POSITIVE DRAINAGE TOWARDS DITCHES.

AECOM

PROJECT

City of Brandon
South Forcemain

CLIENT

City of Brandon
Brandon, Manitoba

CONSULTANT

AECOM
99 Commerce Drive
Winnipeg, Manitoba R3P 0Y7
204.477.5381 tel 204.284.2040 fax
www.aecom.com

PRELIMINARY
NOT FOR CONSTRUCTION
Date: 2018.09.04

REGISTRATION

ISSUE/REVISION

I/R	DATE	DESCRIPTION
0	2018.09.04	ISSUED FOR 90% REVIEW

PROJECT NUMBER

60247924

SHEET TITLE

SOUTH FORCEMAIN
CIVIL
PLAN/PROFILE
STA. 0+770 TO STA. 1+040

SHEET NUMBER

C-004

This drawing has been prepared for the use of AECOM's client and may not be used, reproduced or relied upon by third parties except as agreed by AECOM and its client, as required by law or for use by governmental reviewing agencies. AECOM accepts no responsibility, and denies any liability whatsoever, to any party that modifies this drawing without AECOM's express written consent. Do not scale this document. All measurements must be obtained from stated dimensions.

Last saved by: PEDERSENJ (2018-10-09) Last Plotted: 2018-10-30
Filename: P:\60247924\000-CAD\02-SHEETS\CSOUTH FORCEMAIN\60247924-SHT-30-PH02-C-0001.DWG

Printed on ___% Post-Consumer Recycled Content Paper

Project Management Initials: Designer: Checked: Approved: ANSI D 864mm x 559mm

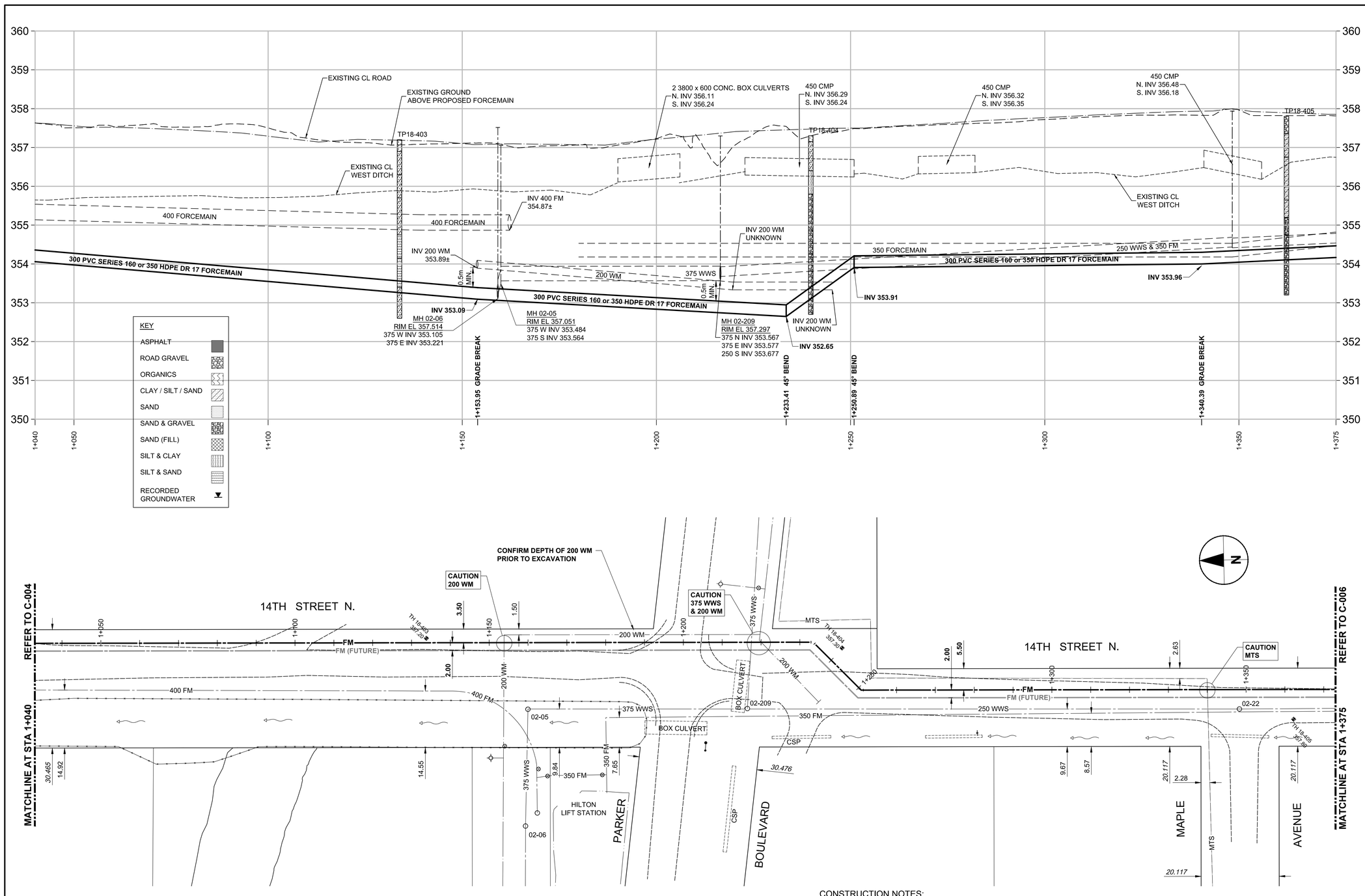

150 WM	WATERMAIN	150 WM		HYDRO		150 WM	WATERMAIN	150 WM
	HYDRANT			MTS		300 LDS	LAND DRAINAGE SEWER	300 LDS
	VALVE			GAS		250 WWS	WASTE WATER SEWER	250 WWS
300 LDS	LAND DRAINAGE SEWER	300 LDS		LAMP STANDARD			PAVEMENT CROWN	
250 WWS	WASTE WATER SEWER	250 WWS					GROUNDLINE	
	MANHOLE			TRAFFIC SIGNAL				
	CATCH BASIN			ASPHALT				
	FLOW DIRECTION			CONCRETE				
	CULVERT			BACK OF CURB				
	TREE			DRAINAGE				
	SURVEY BAR		360.634	GRADE	361.306			
EXISTING	LEGEND - PLAN	NEW	EXISTING	LEGEND - PLAN	NEW	EXISTING	LEGEND - PROFILE	NEW

PLAN

Scale Horz. 1:500
Vert. 1:50

CONSTRUCTION NOTES:

1. ALL WORK AND MATERIAL IN ACCORDANCE WITH THE LATEST REVISION OF THE CITY OF BRANDON STANDARD SPECIFICATION UNLESS NOTED OTHERWISE.
2. LOCATION OF UNDERGROUND STRUCTURES AS SHOWN ARE BASED ON THE BEST INFORMATION AVAILABLE. BUT NO GUARANTEE IS GIVEN THAT ALL EXISTING UTILITIES ARE SHOWN OR THAT THE GIVEN LOCATIONS ARE EXACT. CONFIRMATION OF EXISTENCE AND EXACT LOCATION OF ALL SERVICES MUST BE OBTAINED FROM THE INDIVIDUAL UTILITIES BEFORE PROCEEDING WITH CONSTRUCTION.
3. EXPOSE ALL UNDERGROUND UTILITIES BY HYDROVAC EXCAVATION.
4. TRENCH BACKFILL UNDER EXISTING PAVEMENTS SHALL BE IN ACCORDANCE WITH THE CITY OF BRANDON STANDARD CONSTRUCTION SPECIFICATIONS.
5. CONTRACTOR TO RESTORE AREA TO EQUAL OR BETTER THAN ORIGINAL CONDITION MAINTAINING POSITIVE DRAINAGE TOWARDS DITCHES.

AECOM

PROJECT

City of Brandon
South Forcemain

CLIENT

City of Brandon
Brandon, Manitoba

CONSULTANT

AECOM
99 Commerce Drive
Winnipeg, Manitoba R3P 0Y7
204.477.5381 tel 204.284.2040 fax
www.aecom.com

PRELIMINARY
NOT FOR CONSTRUCTION
Date: 2018.09.04

REGISTRATION

ISSUE/REVISION

I/R	DATE	DESCRIPTION
0	2018.09.04	ISSUED FOR 90% REVIEW

PROJECT NUMBER

60247924

SHEET TITLE

SOUTH FORCEMAIN
CIVIL
PLAN/PROFILE
STA. 1+040 TO STA. 1+375

SHEET NUMBER

C-005

This drawing has been prepared for the use of AECOM's client and may not be used, reproduced or relied upon by third parties except as agreed by AECOM and as required by law or for governmental purposes. AECOM accepts no responsibility, and denies any liability whatsoever, to any party that modifies this drawing without AECOM's express written consent. Do not scale this document. All measurements must be obtained from stated dimensions.

Last saved by: PEDERSENJ(2018-10-09) Last Plotted: 2018-10-30
Filename: P:\60247924\000-CAD\02-SHEETS\C\SOUTH FORCEMAIN\60247924-SHT-30-PH02-C-0001.DWG

Printed on ___% Post-Consumer Recycled Content Paper

Project Management Initials: Designer: ____ Checked: ____ Approved: ____ ANSI D 864mm x 559mm

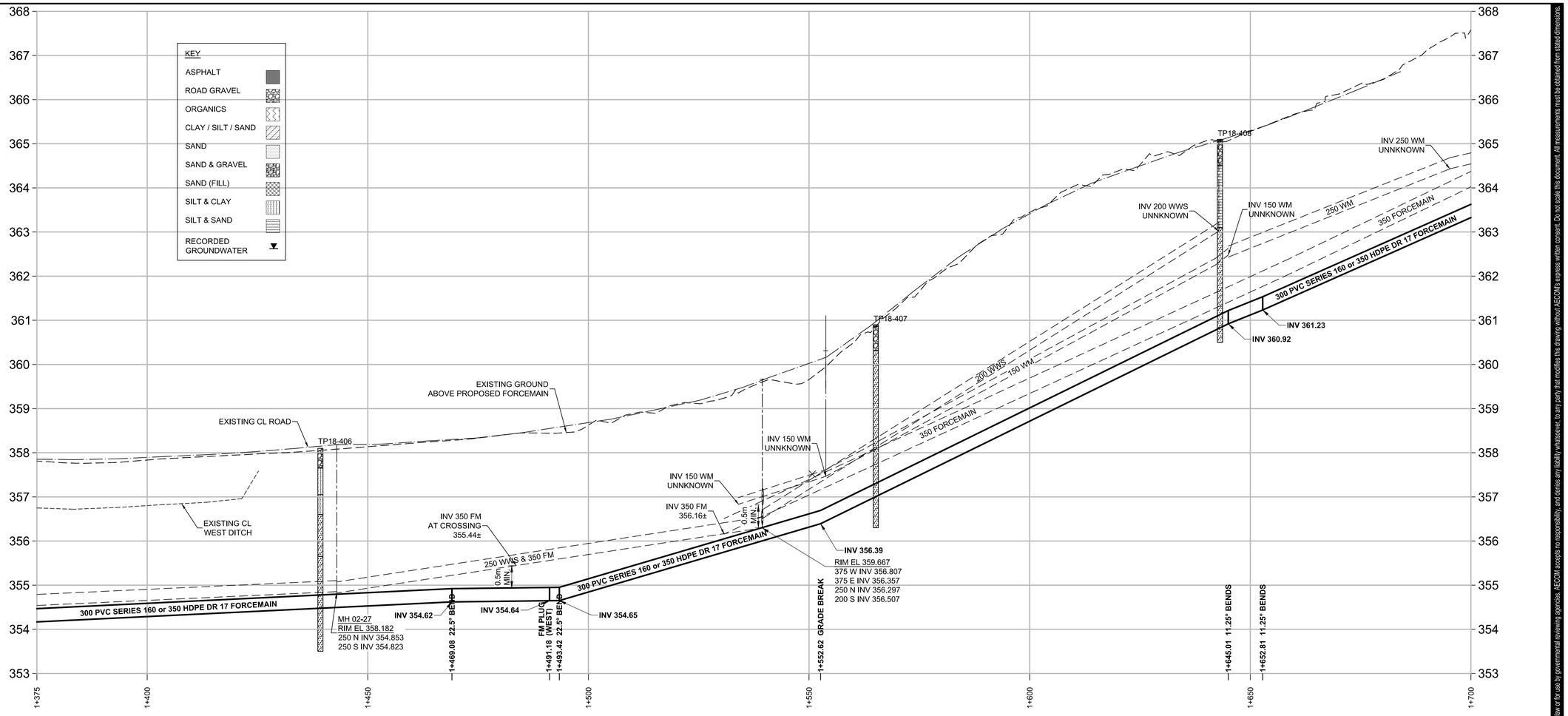

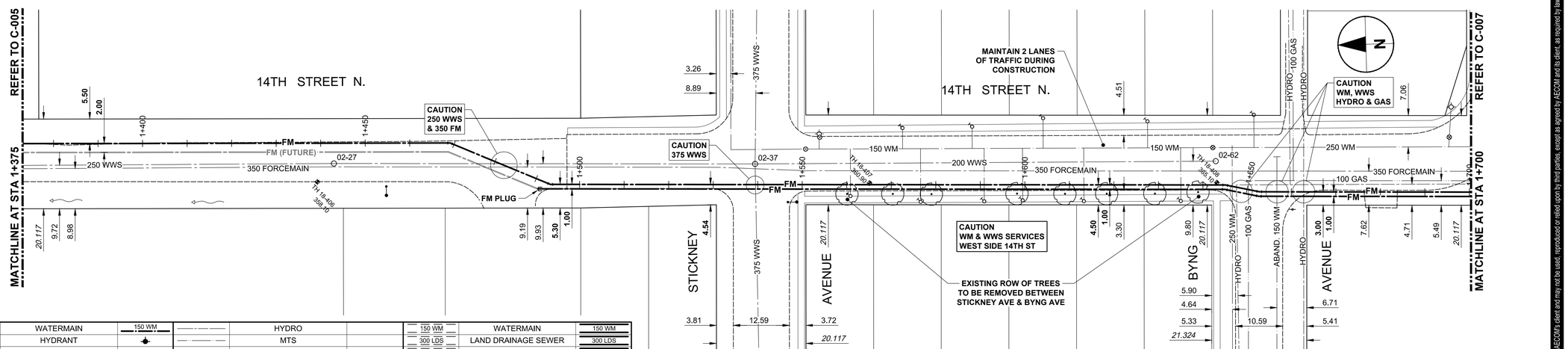

150 WM	WATERMAIN	150 WM		HYDRO		150 WM	WATERMAIN	150 WM
	HYDRANT			MTS		300 LDS	LAND DRAINAGE SEWER	300 LDS
	VALVE			GAS		250 WWS	WASTE WATER SEWER	250 WWS
300 LDS	LAND DRAINAGE SEWER	300 LDS		LAMP STANDARD			PAVEMENT CROWN	
250 WWS	WASTE WATER SEWER	250 WWS					GROUNDLINE	
	MANHOLE			TRAFFIC SIGNAL				
	CATCH BASIN			ASPHALT				
	FLOW DIRECTION			CONCRETE				
	CULVERT			BACK OF CURB				
	TREE			DRAINAGE				
	SURVEY BAR		360.634	GRADE	361.300			
EXISTING	LEGEND - PLAN	NEW	EXISTING	LEGEND - PLAN	NEW	EXISTING	LEGEND - PROFILE	NEW

PLAN

Scale Horz. 1:250
Vert. 1:50

CONSTRUCTION NOTES:

1. ALL WORK AND MATERIAL IN ACCORDANCE WITH THE LATEST REVISION OF THE CITY OF BRANDON STANDARD SPECIFICATION UNLESS NOTED OTHERWISE.
2. LOCATION OF UNDERGROUND STRUCTURES AS SHOWN ARE BASED ON THE BEST INFORMATION AVAILABLE. BUT NO GUARANTEE IS GIVEN THAT ALL EXISTING UTILITIES ARE SHOWN OR THAT THE GIVEN LOCATIONS ARE EXACT. CONFIRMATION OF EXISTENCE AND EXACT LOCATION OF ALL SERVICES MUST BE OBTAINED FROM THE INDIVIDUAL UTILITIES BEFORE PROCEEDING WITH CONSTRUCTION.
3. EXPOSE ALL UNDERGROUND UTILITIES BY HYDROVAC EXCAVATION.
4. TRENCH BACKFILL UNDER EXISTING PAVEMENTS SHALL BE IN ACCORDANCE WITH THE CITY OF BRANDON STANDARD CONSTRUCTION SPECIFICATIONS. CONTRACTOR TO REPLACE EXISTING ROAD STRUCTURE WITH CONCRETE PAVEMENT AND CURB.
5. CONTRACTOR TO RESTORE AREA TO EQUAL OR BETTER THAN ORIGINAL CONDITION MAINTAINING POSITIVE DRAINAGE TOWARDS DITCHES.

Last saved by: PEDERSENJ(2018-10-09) Last Plotted: 2018-10-30
Filename: P:\60247924\000-CAD\02-SHEETS\CSOUTH FORCEMAIN\60247924-SHT-30-PH02-C-0001.DWG

Printed on ___% Post-Consumer Recycled Content Paper

This drawing has been prepared for the use of AECOM's client and may not be used, reproduced or relied upon by third parties, except as agreed by AECOM and its client, as required by law or for use by governmental reviewing agencies. AECOM accepts no responsibility, and denies any liability whatsoever, to any party that modifies this drawing without AECOM's express written consent. Do not scale this document. All measurements must be obtained from stated dimensions.

AECOM

PROJECT

City of Brandon
South Forcemain

CLIENT

City of Brandon
Brandon, Manitoba

CONSULTANT

AECOM
99 Commerce Drive
Winnipeg, Manitoba R3P 0Y7
204.477.5381 tel 204.284.2040 fax
www.aecom.com

PRELIMINARY
NOT FOR CONSTRUCTION
Date: 2018.09.04

REGISTRATION

ISSUE/REVISION

I/R	DATE	DESCRIPTION
0	2018.09.04	ISSUED FOR 90% REVIEW

PROJECT NUMBER

60247924

SHEET TITLE

SOUTH FORCEMAIN
CIVIL
PLAN/PROFILE
STA. 1+375 TO STA. 1+700

SHEET NUMBER

C-006

Project Management Initials: Designer: M.M. Checked: ____ Approved: ____ ANSI D 864mm x 559mm

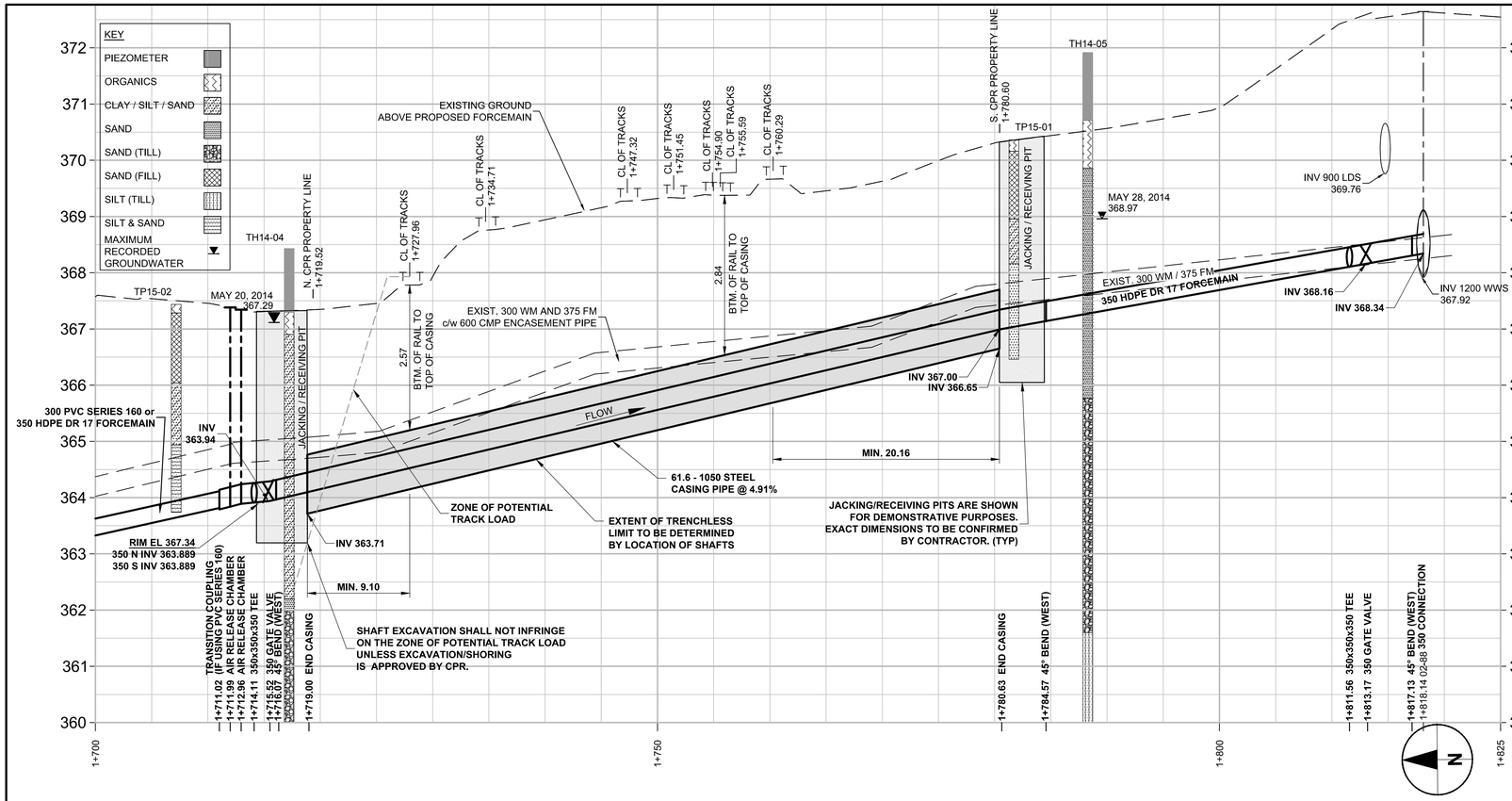

RAIL CROSSING NOTES:

RAILWAY MILEAGE AND SUBDIVISION :	MILE 0.25 BROADVIEW SUBDIVISION	
MUNICIPAL DESCRIPTION OF ADJACENT PROPERTIES:	PACIFIC AVENUE	
NAME OF PIPELINE OWNER:	CITY OF BRANDON, WATER AND WASTE DEPARTMENT	
CONTENTS TO BE HANDLED:		WASTEWATER
MAXIMUM OPERATING PRESSURE:		530 KPa (75 psi)
MAXIMUM TEST PRESSURE		790 KPA (115 psi)
MAXIMUM OPERATING TEMPERATURE		20°C
MINIMUM OPERATING TEMPERATURE		4°C
PIPING MATERIALS	CARRIER	CASING
NOMINAL DIAMETER	350 mm	1050 mm
OUTSIDE DIAMETER	355.6 mm	1067 mm
MATERIAL	HDPE DR17	STEEL
SPECIFICATION AND GRADE	AWWA C906	MIN. YIELD STRENGTH 240 MPa
WALL THICKNESS	22.20 mm MIN.	14.3 mm MIN.
TYPE OF JOINT	FUSION	WELDED or MECH. (PERMA LOK)
COATING	NA	NA
LOCATION OF SHUT OFF VALVE FOR 350 FORCEMAIN	ASSINIBOINE AVE.: 11.6m NORTH OF CENTER OF CPR TRACKS	
LOCATION OF SHUT OFF VALVE FOR 350 MUNICIPAL EFFLUENT	PACIFIC AVENUE: 52.8m SOUTH OF CENTER OF CPR TRACKS	
METHOD OF INSTALLATION	TRENCHLESS - CASING TO BE JACKED OR RAMMED WITH NO SOIL REMOVAL WITHIN 2134mm INSIDE ADVANCING FACE OF CASING.	
VENTS:	NA	NUMBER: NA
	HEIGHT ABOVE GROUND:	NA
SEALS:	BOTH ENDS	YES
	TYPE:	PERMEABLE GEOTEXTILE FABRIC
BURY:	BASE OF RAIL TO TOP OF CASING	2.91m
	NOT BENEATH TRACKS	- m
	ROADWAY DITCHES	- m
	BASE OF RAIL TO BOTTOM OF JACKING/RECEIVING PITS	4.58m

EXTENT OF CASING MEASURED PERPENDICULAR TO CENTERLINE OF TRACK 20.10m SOUTH / 9.06m NORTH

CENTERLINE OF TRACK TO FACE OF JACKING/RECEIVING PITS 20.10m SOUTH / 9.06m NORTH

TYPE, SIZE, AND SPACING OF INSULATORS OR SUPPORTS: SEE DETAIL 1

CATHODIC PROTECTION	6 (TOTAL) 16.3 kg ANODES
GEOTECHNICAL BOREHOLES	YES
SOIL TYPE	SAND/ SILT
BASE OF RAIL TO GROUND WATER	APPROX. 1.5m - 2.0m

TO BE CONSTRUCTED AND MAINTAINED IN ACCORDANCE WITH TC-E10

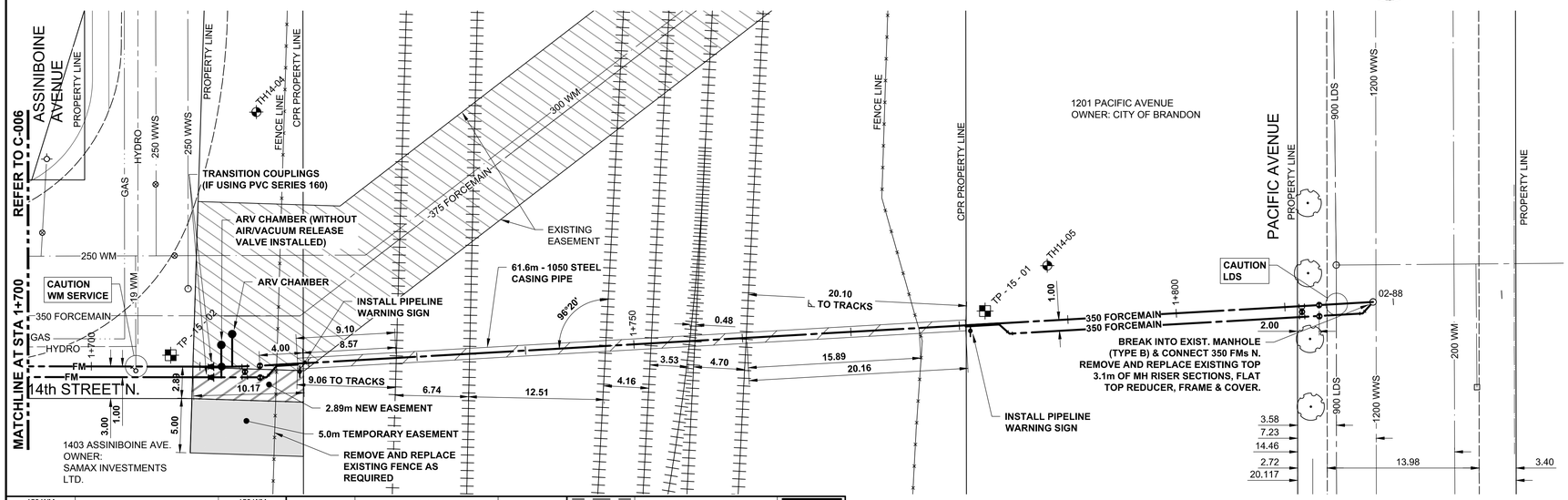

150 WM	WATERMAIN	150 WM		HYDRO		150 WM	WATERMAIN	150 WM
	HYDRANT			MTS		300 LDS	LAND DRAINAGE SEWER	300 LDS
	VALVE			GAS		250 WWS	WASTE WATER SEWER	250 WWS
300 LDS	LAND DRAINAGE SEWER	300 LDS		LAMP STANDARD			PAVEMENT CROWN	
250 WWS	WASTE WATER SEWER	250 WWS					GROUNDLINE	
	MANHOLE			TRAFFIC SIGNAL				
	CATCH BASIN			ASPHALT				
	FLOW DIRECTION			CONCRETE				
	CULVERT			BACK OF CURB				
	TREE			DRAINAGE				
	SURVEY BAR		360.634	GRADE	361.388			
EXISTING	LEGEND - PLAN	NEW	EXISTING	LEGEND - PLAN	NEW	EXISTING	LEGEND - PROFILE	NEW

PLAN

Scale Horz. 1:250
Vert. 1:50

CONSTRUCTION NOTES:

1. ALL WORK AND MATERIALS SHALL CONFORM TO CITY OF BRANDON STANDARD CONSTRUCTION SPECIFICATIONS.
2. LOCATION OF UNDERGROUND STRUCTURES AS SHOWN ARE BASED ON THE BEST INFORMATION AVAILABLE. BUT NO GUARANTEE IS GIVEN THAT ALL EXISTING UTILITIES ARE SHOWN OR THAT THE GIVEN LOCATIONS ARE EXACT. CONFIRMATION OF EXISTENCE AND EXACT LOCATION OF ALL SERVICES MUST BE OBTAINED FROM THE INDIVIDUAL UTILITIES BEFORE PROCEEDING WITH CONSTRUCTION.
3. EXPOSE ALL COMMUNICATION, POWER DUCTS AND LINES BY HYDROVAC EXCAVATION.
4. TRENCH BACKFILL UNDER EXISTING PAVEMENTS AND PROPOSED PAVEMENTS SHALL BE IN ACCORDANCE WITH THE CITY OF BRANDON STANDARD CONSTRUCTION SPECIFICATIONS.
5. COMPLETE WORK AT RAIL LINES IN ACCORDANCE WITH TRANSPORT CANADA E-10.
6. ALL PIPES TO BE INSTALLED AT A MIN DEPTH OF 2.5m UNLESS NOTED OTHERWISE.
7. CONFIRM ALL ELEVATIONS PRIOR TO CONSTRUCTION.

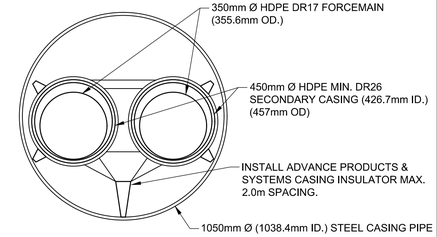

1 - CASING PIPE N.T.S.

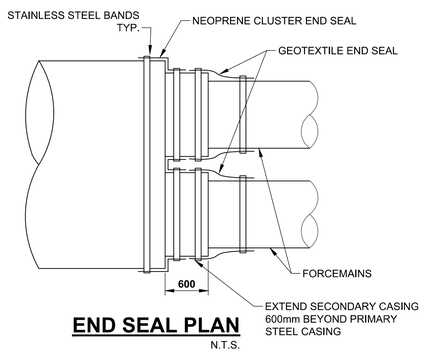

END SEAL PLAN N.T.S.

This drawing has been prepared for the use of AECOM's client and may not be used, reproduced or relied upon by third parties, except as agreed by AECOM and its client, as required by law or for use by governmental reviewing agencies. AECOM accepts no responsibility, and denies any liability whatsoever to any party that modifies this drawing without AECOM's express written consent. Do not scale this document. All measurements must be obtained from stated dimensions.

AECOM

PROJECT

City of Brandon
South Forcemain

CLIENT

City of Brandon
Brandon, Manitoba

CONSULTANT

AECOM
99 Commerce Drive
Winnipeg, Manitoba R3P 0Y7
204.477.5381 tel 204.284.2040 fax
www.aecom.com

PRELIMINARY
NOT FOR CONSTRUCTION
Date: 2018.09.04

REGISTRATION

PROVINCE OF MANITOBA
M.P.A. GAUDREAU
Member
32167
REGISTERED PROFESSIONAL ENGINEER

APEGM
Certificate of Authorization
AECOM Canada Ltd.
No. 4671 Date: 2018.09.04

ISSUE/REVISION

D	2018.09.04	REVISED MILEAGE & SUBDIVISION
C	2018.07.05	REVISIONS FOR CPR APPROVALS
B	2018.04.19	ISSUED 75% FOR REVIEW
A	2016.08.04	ISSUED FOR CPR APPROVALS
I/R	DATE	DESCRIPTION

PROJECT NUMBER

60247924

SHEET TITLE

SOUTH FORCEMAIN
CIVIL
PLAN/PROFILE - CPR CROSSING
STA. 1+700 TO STA. 1+825

SHEET NUMBER

C-007

Last saved by: LACOSTEG(2018-10-26) Last Plotted: 2018-10-30
Filename: P:\60247924\000-CAD\02-SHEETS\CSOUTH FORCEMAIN\60247924-SHT-30-PH02-C-RR XING.DWG

Printed on ___% Post-Consumer Recycled Content Paper

Project Management Initials: ____ Designer: ____ Checked: ____ Approved: ____ ANSI D 864mm x 559mm

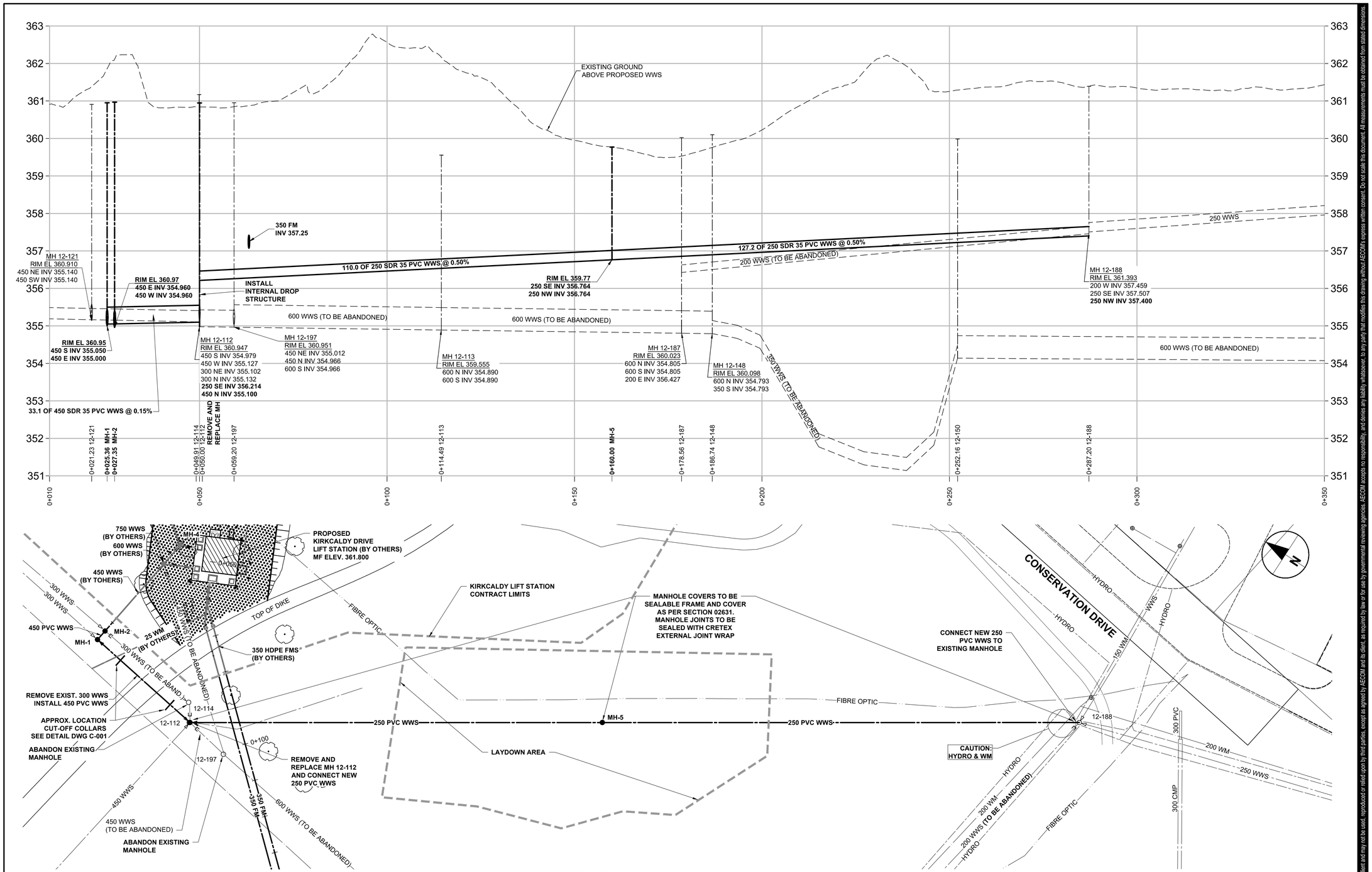

150 WM	WATERMAIN	150 WM		HYDRO		150 WM	WATERMAIN	150 WM
	HYDRANT			MTS		300 LDS	LAND DRAINAGE SEWER	300 LDS
	VALVE			GAS		250 WWS	WASTE WATER SEWER	250 WWS
300 LDS	LAND DRAINAGE SEWER	300 LDS		LAMP STANDARD			PAVEMENT CROWN	
250 WWS	WASTE WATER SEWER	250 WWS					GROUNDLINE	
	MANHOLE			TRAFFIC SIGNAL				
	CATCH BASIN			ASPHALT				
	FLOW DIRECTION			CONCRETE				
	CULVERT			BACK OF CURB				
	TREE			DRAINAGE				
	SURVEY BAR		360.634	GRADE	361.300			
EXISTING	LEGEND - PLAN	NEW	EXISTING	LEGEND - PLAN	NEW	EXISTING	LEGEND - PROFILE	NEW

PLAN

Scale Horz. 1:250
Vert. 1:50

CONSTRUCTION NOTES:

1. ALL WORK AND MATERIAL IN ACCORDANCE WITH THE LATEST REVISION OF THE CITY OF BRANDON STANDARD SPECIFICATION UNLESS NOTED OTHERWISE.
2. LOCATION OF UNDERGROUND STRUCTURES AS SHOWN ARE BASED ON THE BEST INFORMATION AVAILABLE. BUT NO GUARANTEE IS GIVEN THAT ALL EXISTING UTILITIES ARE SHOWN OR THAT THE GIVEN LOCATIONS ARE EXACT. CONFIRMATION OF EXISTENCE AND EXACT LOCATION OF ALL SERVICES MUST BE OBTAINED FROM THE INDIVIDUAL UTILITIES BEFORE PROCEEDING WITH CONSTRUCTION.
3. EXPOSE ALL UNDERGROUND UTILITIES BY HYDROVAC EXCAVATION.
4. TRENCH BACKFILL UNDER EXISTING PAVEMENTS SHALL BE IN ACCORDANCE WITH THE CITY OF BRANDON STANDARD CONSTRUCTION SPECIFICATIONS. CONTRACTOR TO REPLACE EXISTING ROAD STRUCTURE WITH CONCRETE PAVEMENT AND CURB.
5. CONTRACTOR TO RESTORE AREA TO EQUAL OR BETTER THAN ORIGINAL CONDITION MAINTAINING POSITIVE DRAINAGE TOWARDS DITCHES.
6. ALL PIPE ABANDONMENTS TO OCCUR AFTER LIFT STATION AND FORCEMAINS ARE OPERATIONAL.

Last saved by: PEDERSEN,J (2018-09-04) Last Plotted: 2018-10-30
Filename: P:\60247924\000-CAD\02-SHEETS\CS\SOUTH FORCEMAIN\60247924-SHT-30-PH02-C-0008.DWG

Printed on ___% Post-Consumer Recycled Content Paper

AECOM

PROJECT

City of Brandon
South Forcemain

CLIENT

City of Brandon
Brandon, Manitoba

CONSULTANT

AECOM
99 Commerce Drive
Winnipeg, Manitoba R3P 0Y7
204.477.5381 tel 204.284.2040 fax
www.aecom.com

PRELIMINARY
NOT FOR CONSTRUCTION
Date: 2018.09.04

REGISTRATION

ISSUE/REVISION

0	2018.09.04	ISSUED FOR 90% REVIEW
I/R	DATE	DESCRIPTION

PROJECT NUMBER

60247924

SHEET TITLE

DISCOVERY CENTRE WWS SERVICE
CIVIL
PLAN/PROFILE
MH 12-112 TO MH 12-188

SHEET NUMBER

C-008

This drawing has been prepared for the use of AECOM's client and may not be used, reproduced or relied upon by third parties except as agreed by AECOM and as required by law or governmental agencies. AECOM accepts no responsibility, and denies any liability whatsoever, to any party that modifies this drawing without AECOM's express written consent. Do not scale this document. All measurements must be obtained from stated dimensions.

Project Management Initials: Designer: Checked: Approved: ANSI D 864mm x 559mm

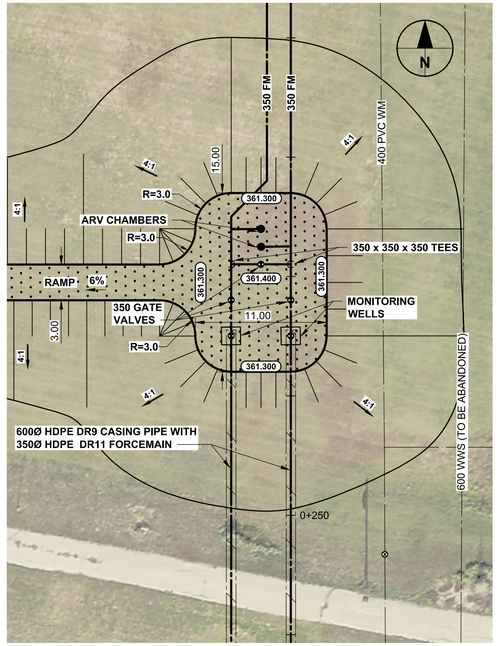

VALVE ACCESS PAD (NORTH)

N.T.S.

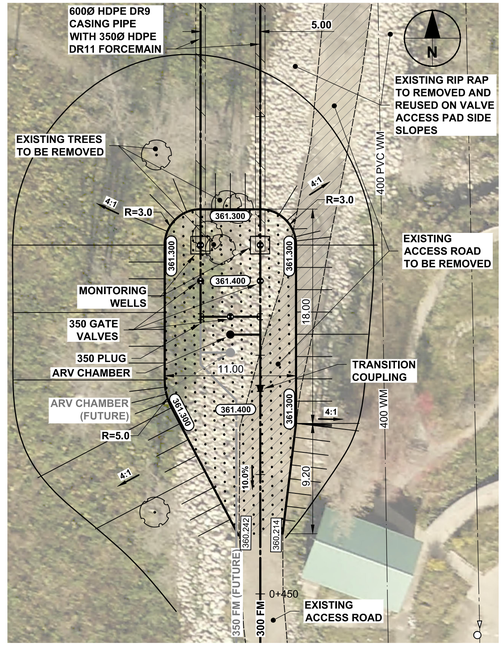

VALVE ACCESS PAD (SOUTH)

N.T.S.

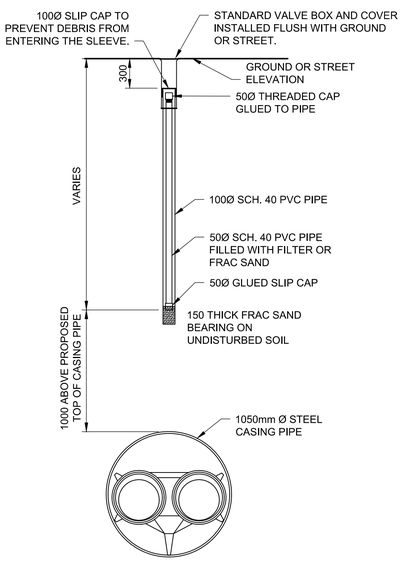

SUB-SURFACE SETTLEMENT MONITOR

N.T.S.

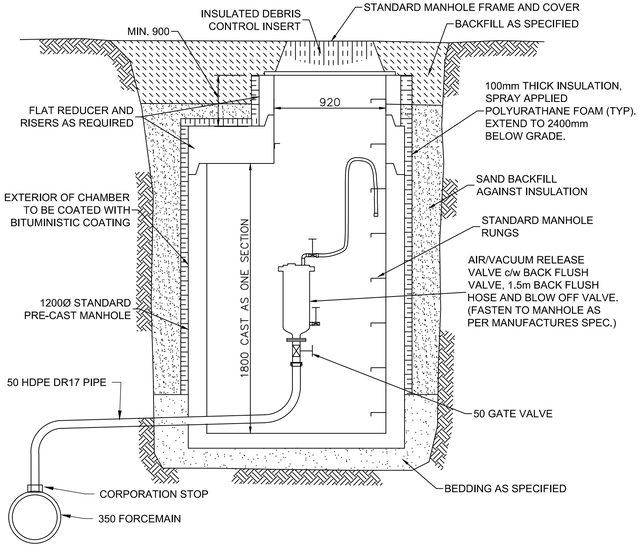

AIR RELEASE VALVE CHAMBER

N.T.S.

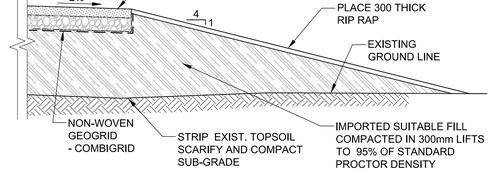

VALVE ACCESS PAD SECTION

N.T.S.

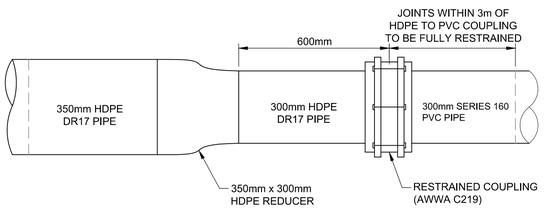

TRANSITION COUPLING 350 HDPE to 300 SERIES 160 PVC

N.T.S.

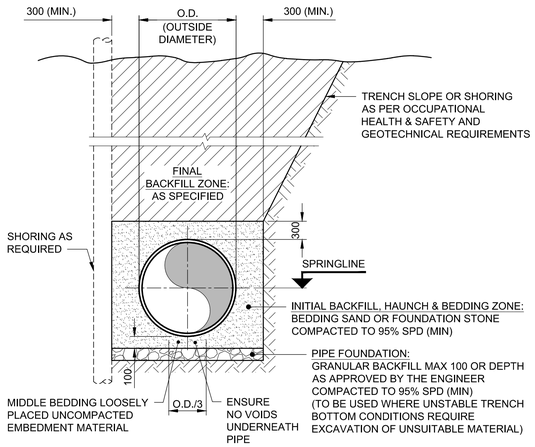

NOTE:
ANY OPEN GRADED GRANULAR MATERIALS SHALL BE WRAPPED WITH A NON-WOVEN GEOTEXTILE, SEAMS SHALL BE OVERLAPPED 300 (MIN).

DETAIL - SINGLE PIPE INSTALLATION

N.T.S.

TRENCH OR SHAFT (PVC & CSP PIPE)

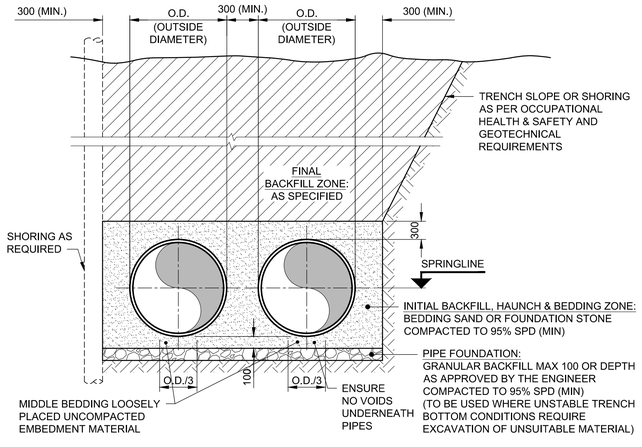

NOTE:
ANY OPEN GRADED GRANULAR MATERIALS SHALL BE WRAPPED WITH A NON-WOVEN GEOTEXTILE, SEAMS SHALL BE OVERLAPPED 300 (MIN).

DETAIL - DUAL PIPE INSTALLATION

N.T.S.

TRENCH OR SHAFT (PVC & CSP PIPE)

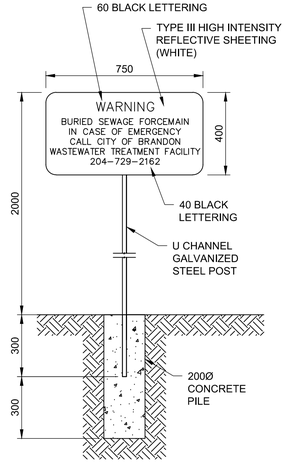

PIPELINE WARNING SIGN

N.T.S.

150 WM	WATERMAIN	150 WM		HYDRO		150 WM	WATERMAIN	150 WM
	HYDRANT			MTS		300 LDS	LAND DRAINAGE SEWER	300 LDS
	VALVE			GAS		250 WWS	WASTE WATER SEWER	250 WWS
300 LDS	LAND DRAINAGE SEWER	300 LDS		LAMP STANDARD			PAVEMENT CROWN	
250 WWS	WASTE WATER SEWER	250 WWS					GROUNDLINE	
	MANHOLE			TRAFFIC SIGNAL				
	CATCH BASIN			ASPHALT				
	FLOW DIRECTION			CONCRETE				
	CULVERT			BACK OF CURB				
	TREE			DRAINAGE				
	SURVEY BAR		360.634	GRADE	361.300			
EXISTING	LEGEND - PLAN	NEW	EXISTING	LEGEND - PLAN	NEW	EXISTING	LEGEND - PROFILE	NEW

Last saved by: PEDERSENJ (2018-10-23) Last Plotted: 2018-10-30
Filename: P:\60247924\000-CAD\02-SHEETS\CS\SOUTH FORCEMAIN\60247924-SHT-30-PH02-C-401.DWG
Printed on ___% Post-Consumer Recycled Content Paper

This drawing has been prepared for the use of AECOM's client and may not be used, reproduced or relied upon by third parties, except as agreed by AECOM and its client, as required by law or for use by governmental reviewing agencies. AECOM accepts no responsibility, and denies any liability whatsoever, to any party that modifies this drawing without AECOM's express written consent. Do not scale this document. All measurements must be obtained from stated dimensions.

AECOM

PROJECT

City of Brandon
South Forcemain

CLIENT

City of Brandon
Brandon, Manitoba

City of BRANDON

CONSULTANT

AECOM
99 Commerce Drive
Winnipeg, Manitoba R3P 0Y7
204.477.5381 tel 204.284.2040 fax
www.aecom.com

PRELIMINARY
NOT FOR CONSTRUCTION
Date: 2018.09.04

REGISTRATION

ISSUE/REVISION

0	2018.09.04	ISSUED FOR 90% REVIEW
I/R	DATE	DESCRIPTION

PROJECT NUMBER

60247924

SHEET TITLE

SOUTH FORCEMAIN
CIVIL
DETAILS
SHEET 1

SHEET NUMBER

C-401

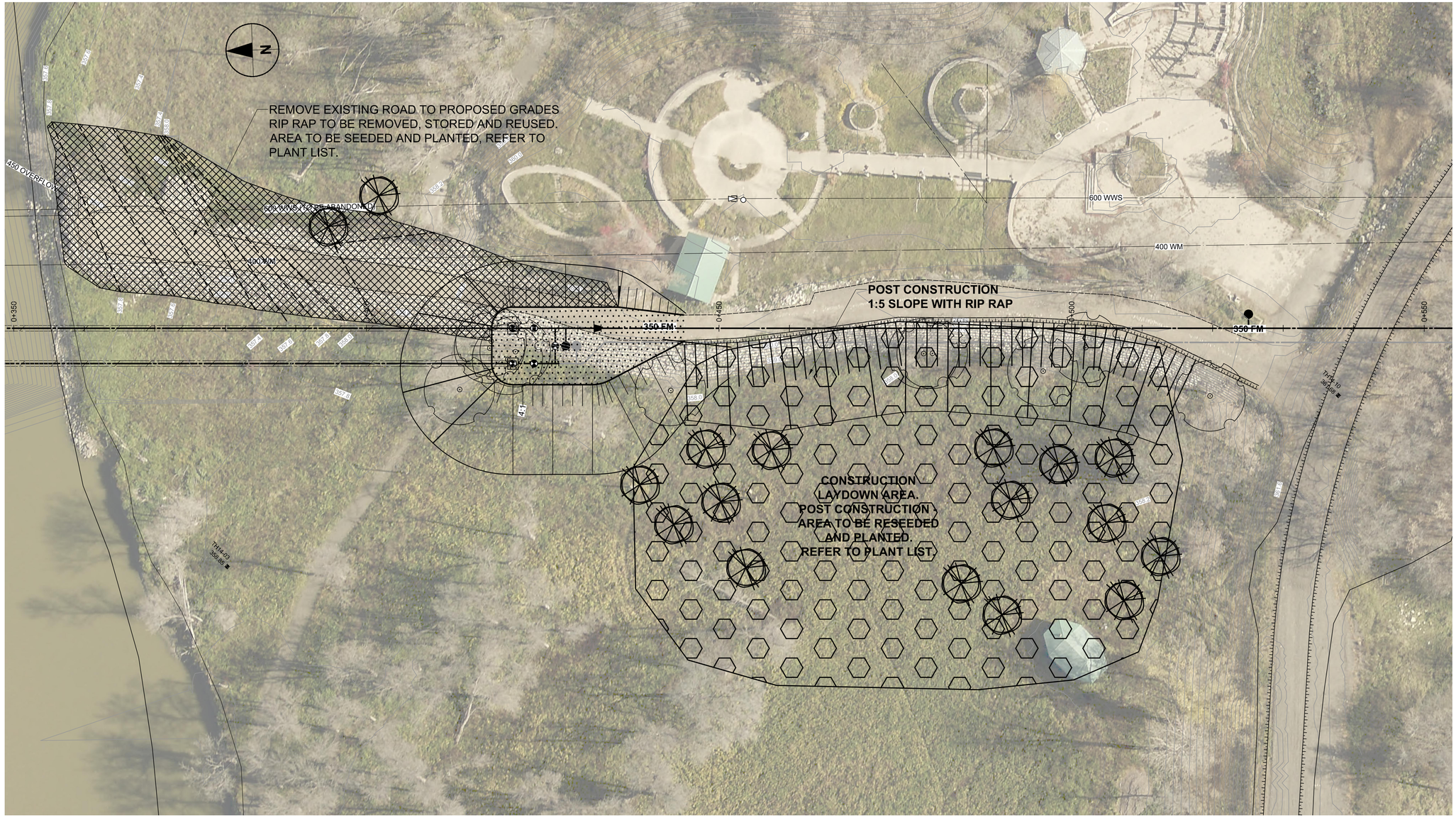

PLAN

Scale 1:300

PLANT LIST

No.	COMMON NAME	BOTANICAL NAME	SIZE / HT	NOTES
	DECIDUOUS TREES - LARGE			
3	Manitoba Maple	*Acer negundo*	50mm cal.	B&B/Machine
1	Balsam Poplar	*Populus balsamifera*	50mm cal.	B&B/Machine
4	Basswood	*Tilia americana*	50mm cal.	B&B/Machine
4	American Elm	*Ulmus americana*	50mm cal.	B&B/Machine
	DECIDUOUS TREES - SMALL			
3	Common Pincherry	*Prunus pennsylvanica*	25mm cal.	B&B/Machine
2	Chokecherry	*Prunus virginiana*	25mm cal.	B&B/Machine

NOTE: All plant material to be supplied and installed in accordance with the latest edition of Landscape Canada's Metric Guide Specifications for Nursery Stock

SEED LIST

	GRASSES	(1.0 kg / 100 m2)
Qty	COMMON NAME	BOTANICAL NAME
40%	Slender Wheat Grass	*Agrpyron trachycaulum*
20%	Switch Grass	*Panicum vergatum*
5% to 8%	of each of the following:	
	Awned Wheat Grass	*Agrpyron subsecundum*
	Rough Hair Grass	*Agrostis scabra*
	Slough Grass	*Beckmannia syzigachne*
	Northern Reed Grass	*Calamagrostis canadensis*
	Whitetop	*Erigeron annuus*
	Alkali Cord Grass	*Spartina gracilis*
	Prairie Cord Grass	*Spartina pectinata*

EXISTING	LEGEND - PLAN	NEW	EXISTING	LEGEND - PLAN	NEW	EXISTING	LEGEND - PROFILE	NEW
150 WM	WATERMAIN	150 WM		HYDRO		150 WM	WATERMAIN	150 WM
	HYDRANT			MTS		300 LDS	LAND DRAINAGE SEWER	300 LDS
	VALVE			GAS		250 WWS	WASTE WATER SEWER	250 WWS
300 LDS	LAND DRAINAGE SEWER	300 LDS		LAMP STANDARD			PAVEMENT CROWN	
250 WWS	WASTE WATER SEWER	250 WWS					GROUNDLINE	
	MANHOLE			TRAFFIC SIGNAL				
	CATCH BASIN			ASPHALT				
	FLOW DIRECTION			CONCRETE				
	CULVERT			BACK OF CURB				
	TREE			DRAINAGE				
	SURVEY BAR		360.634	GRADE	361.300			

Project Management Initials: Designer: ____ Checked: ____ Approved: ____ ANSI D 864mm x 559mm

Last saved by: PEDERSENJ(2018-09-04) Last Plotted: 2018-09-04
Filename: P:\60247924\000-CAD\02-SHEETS\L\60247924-SHT-30-PH02-L-0001.DWG

Printed on ___% Post-Consumer Recycled Content Paper

This drawing has been prepared for the use of AECOM's client and may not be used, reproduced or relied upon by third parties except as agreed by AECOM and its client, as required by law or for use by governmental reviewing agencies. AECOM accepts no responsibility, and denies any liability whatsoever, to any party that modifies this drawing without AECOM's express written consent. Do not scale this document. All measurements must be obtained from stated dimensions.

AECOM

PROJECT

City of Brandon
South Forcemain

CLIENT

City of Brandon
Brandon, Manitoba

CONSULTANT

AECOM
99 Commerce Drive
Winnipeg, Manitoba R3P 0Y7
204.477.5381 tel 204.284.2040 fax
www.aecom.com

PRELIMINARY
NOT FOR CONSTRUCTION
Date: 2018.09.04

REGISTRATION

ISSUE/REVISION

I/R	DATE	DESCRIPTION
0	2018.09.04	ISSUED FOR 90% REVIEW

PROJECT NUMBER

60247924

SHEET TITLE

SOUTH FORCEMAIN
LANDSCAPE ARCHITECTURE
REMOVALS AND LANDSCAPE PLAN

SHEET NUMBER

L-001